FIH CONFIDENTIAL

MODEL NAME: Titan LTE
Version: MP

Revision History and Current Revision :

Revision	Description Of Changes	Date (M-D-Y)	Phase
A00	Initial schematic		P1
A01	P2 schematic		P2

Page Description

Application Pages Summary

01: TITLE
02: BLOCK DIAGRAM
03: GPIO/I2C LIST
04: MSM8x26_CONTROL/USB/SDC
05: MSM8x26_MIPI/RF
06: MSM8x26_GPIO
07: MSM8x26_POWER-1
08: MSM8x26_POWER-2
09: MSM8x26_GND
10: PM8926_CHARGING
11: PM8926_CONTROL/CLK/GPIO
12: PM8926_SMPS
13: PM8926_LDO
14: eMMC/LPDDR2
15: WCD9302
16: SPK/RCV/MIC/HEADSET
17: SIM/SD/VIBRATOR/FLASH LED
18: DISPLAY/TOUCH
19: CAMERA/FLASH LED DRIVER
20: KEY/TP
21: SENSOR/LED

Modem Pages Summary

22: PRI ANT SWITCH
23: HCPA 2GQB/B1/B2/B4/B5/B8
24: Duplexer B1/B4/B3/B2/B5/B8
25: QFE1101
26: WTR1625(L) RFIO/INTF
27: WTR1625(L) PWR DISTRIBUTIO
28: TDD B41 TXRX
29: B12/B17 TRX
30: B28(B20) PATRX
31: B7_Tx/Rx
32: DRX FEM
33: DRX SAW
34: GNSS FRONT END
35: WCN3620

iREPAIR

Sim card / Sim Det	Insert	Not Insert
Voltage Level	1.8V	0V(GND)

SIM1 CARD CONNECTOR

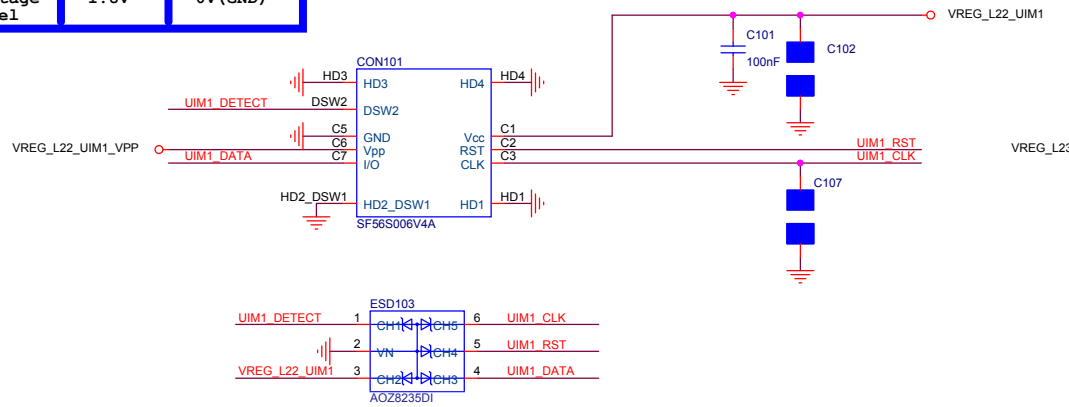

SIM2 CARD CONNECTOR

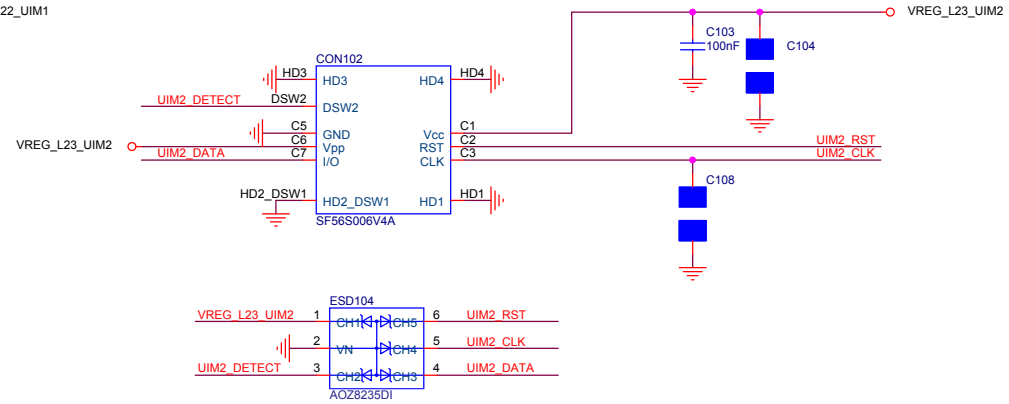

MICRO SD CARD CONNECTOR

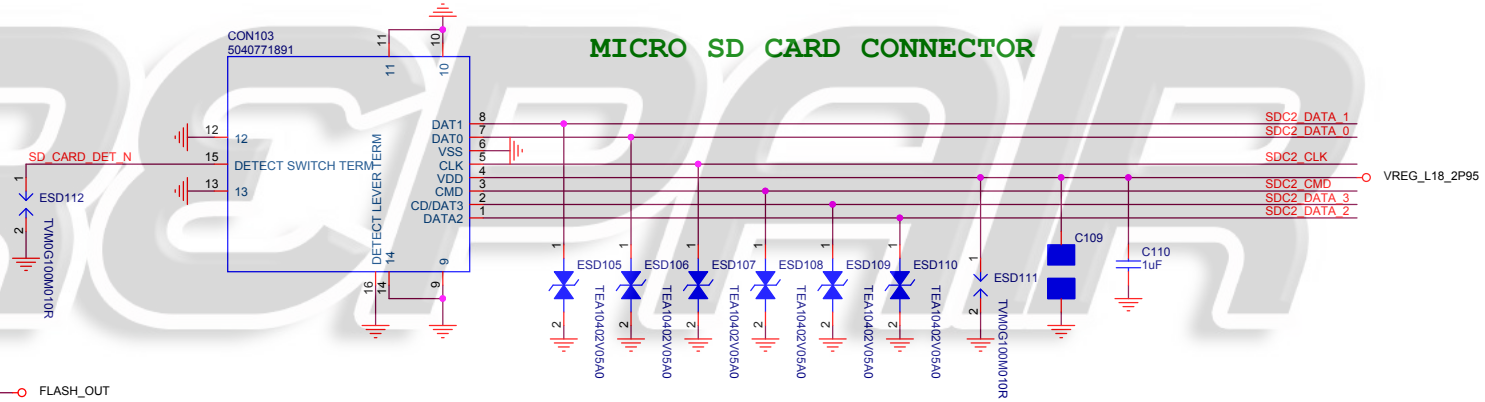

B2B CONNECTOR

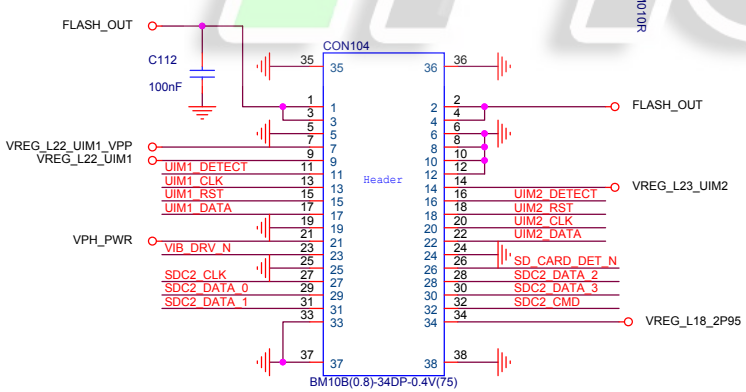

VIBRATOR

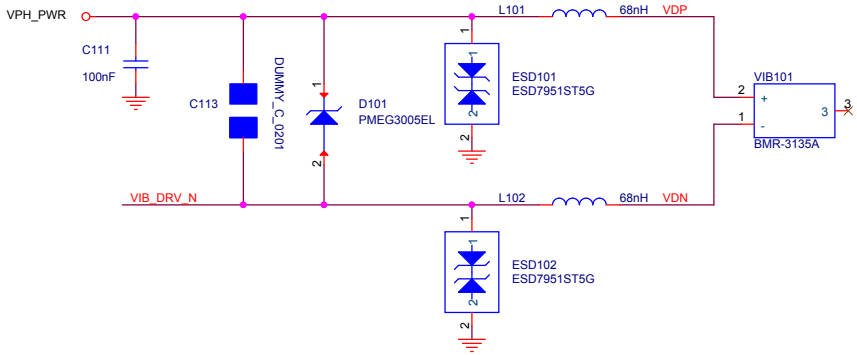

FLASH LED

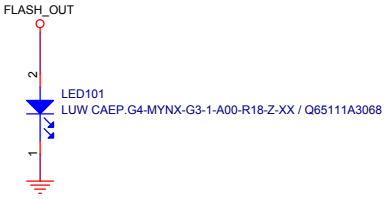

FIH Confidential and Proprietary

Title	SIM/SD/FLASH LED/VIBRATOR	
Size A3	Document Number TLE	Rev P2
Date: Thursday, September 11, 2014	Sheet 1 of 1	

ALS + Proximity sensor

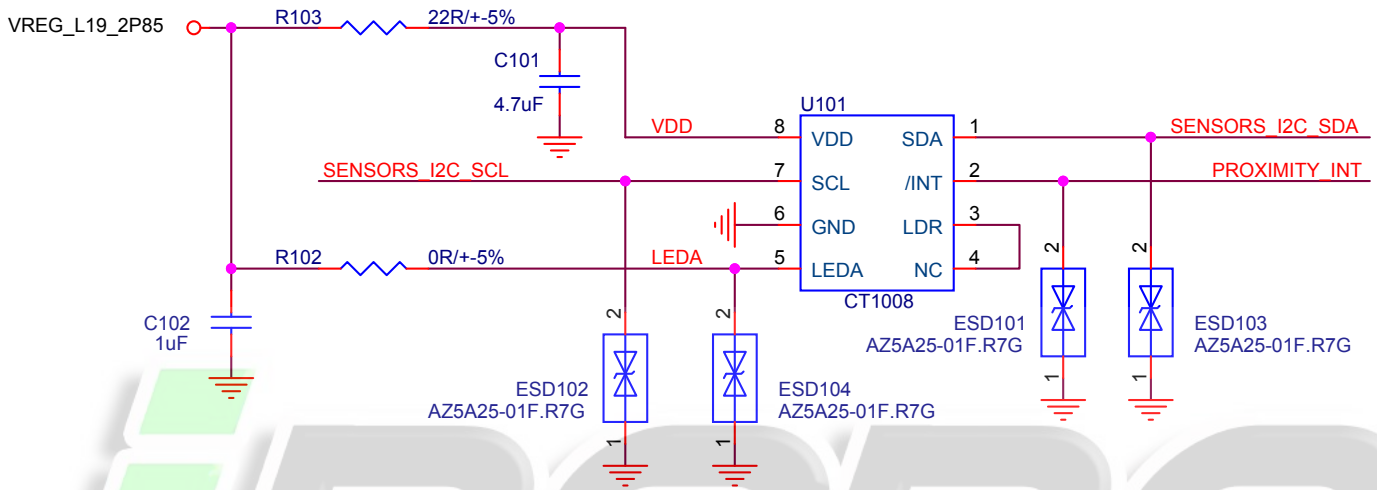

I2C address: 0x48

Indicator LED

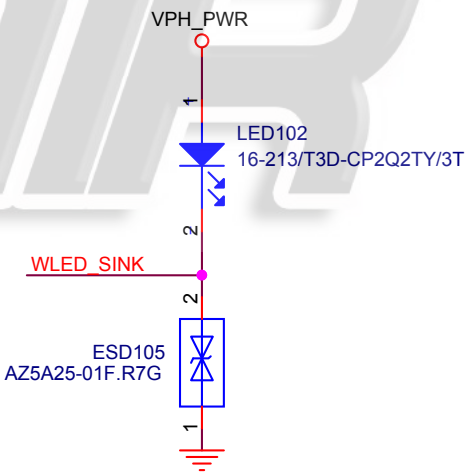

B2B CONNECTOR

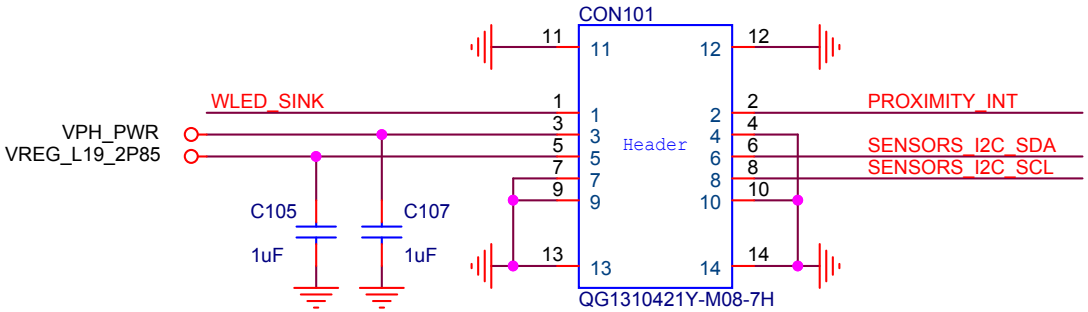

iRepair

FIH Confidential and Proprietary		
Title: P+ALS SENSOR/LED		
Size: A	Document Number: TLE	Rev: P2
Date: Thursday, September 11, 2014	Sheet 1 of 1	

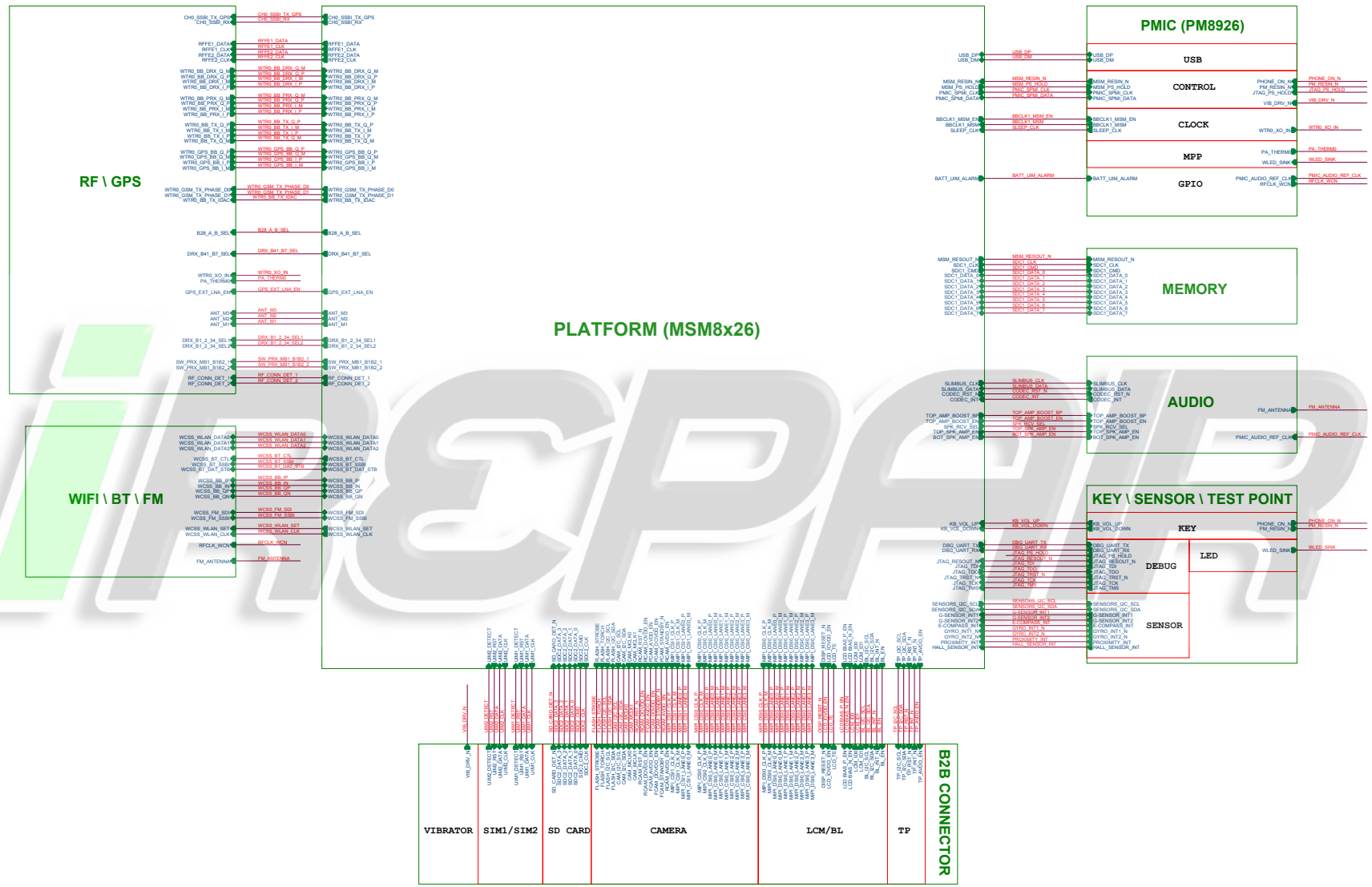

FIH Confidential and Proprietary

Title: BLOCK DIAGRAM		
Size: A1	Document Number: Titan LTE	Rev: MP
Date: Thursday, November 13, 2014	Sheet 2 of 35	

GPIO	Net Name	Wakeup
GPIO_0		
GPIO_1		V
GPIO_2		
GPIO_3		
GPIO_4	BL_INT_N	V
GPIO_5	BL_EN	V
GPIO_6	SENSORS_I2C_SDA	
GPIO_7	SENSORS_I2C_SCL	
GPIO_8	DBG_UART_TX	
GPIO_9	DBG_UART_RX	V
GPIO_10	LCD_IOVDD_EN	
GPIO_11	LCM_ID0	
GPIO_12	LCD BIAS_P_EN	
GPIO_13	LCD BIAS_N_EN	V
GPIO_14	BL_I2C_SDA	
GPIO_15	BL_I2C_SCL	
GPIO_16	TP_RST_N	
GPIO_17	TP_INT_N	V
GPIO_18	TP_I2C_SDA	
GPIO_19	TP_I2C_SCL	
GPIO_20		
GPIO_21		V
GPIO_22	FLASH_I2C_SDA	
GPIO_23	FLASH_I2C_SCL	
GPIO_24	LCD_TE	
GPIO_25	DISP_RESET_N	
GPIO_26	CAM_MCLK0	
GPIO_27	CAM_MCLK1	V
GPIO_28	RCAM_AVDD_EN	
GPIO_29	CAM_I2C_SDA	V
GPIO_30	CAM_I2C_SCL	
GPIO_31	FLASH_TORCH	V
GPIO_32	FLASH_STROBE	
GPIO_33	RCAM_DOVDD_EN	V
GPIO_34		
GPIO_35	FCAM_STANDBY_N	V

GPIO	Net Name	Wakeup
GPIO_36	FCAM_DOVDD_EN	
GPIO_37	RCAM_RST_N	V
GPIO_38	SD_CARD_DET_N	V
GPIO_39	WCSS_BT_SSBI	V
GPIO_40	WCSS_WLAN_DATA2	
GPIO_41	WCSS_WLAN_DATA1	V
GPIO_42	WCSS_WLAN_DATA0	
GPIO_43	WCSS_WLAN_SET	
GPIO_44	WCSS_WLAN_CLK	
GPIO_45	WCSS_FM_SSBI	
GPIO_46	WCSS_FM_SDI	V
GPIO_47	WCSS_BT_CTL	
GPIO_48	WCSS_BT_DAT_STB	V
GPIO_49	G-SENSOR_INT2	V
GPIO_50	TOP_SPK_AMP_EN	V
GPIO_51	BOT_SPK_AMP_EN	V
GPIO_52	SPK_RCV_SEL	V
GPIO_53	UIM2_DATA	
GPIO_54	UIM2_CLK	V
GPIO_55	UIM2_RST	
GPIO_56	UIM2_DETECT	
GPIO_57	UIM1_DATA	
GPIO_58	UIM1_CLK	
GPIO_59	UIM1_RST	
GPIO_60	UIM1_DETECT	
GPIO_61	BATT_UIM_ALARM	
GPIO_62	GYRO_INT2_N	V
GPIO_63	G-SENSOR_INT1	V
GPIO_64	GYRO_INT1_N	V
GPIO_65	PROXIMITY_INT	V
GPIO_66	E-COMPASS_INT	V
GPIO_67	LCM_ID1	V
GPIO_68	CODEC_INT	V
GPIO_69	TP_AVDD_EN	V
GPIO_70	SLIMBUS_CLK	
GPIO_71	SLIMBUS_DATA	V

GPIO	Net Name	Wakeup
GPIO_72	CODEC_RST_N	V
GPIO_73	RFFE2_CLK	
GPIO_74	RFFE2_DATA	
GPIO_75		
GPIO_76		
GPIO_77		
GPIO_78		
GPIO_79	B28_A_B_SEL	
GPIO_80	SW_PRX_MB1_B1B2_1	
GPIO_81	SW_PRX_MB1_B1B2_2	
GPIO_82	DRX_B41_B7_SEL	
GPIO_83		
GPIO_84		
GPIO_85	RF_CONN_DET_1	
GPIO_86	RF_CONN_DET_2	
GPIO_87	DRX_B1_2_34_SEL1	
GPIO_88	DRX_B1_2_34_SEL2	
GPIO_89		
GPIO_90	ANT_M1	
GPIO_91	ANT_M2	
GPIO_92	ANT_M3	
GPIO_93		
GPIO_94		
GPIO_95	WTR0_GSM_TX_PHASE_D0	
GPIO_96	WTR0_GSM_TX_PHASE_D1	
GPIO_97		
GPIO_98		
GPIO_99	RFFE1_CLK	
GPIO_100	RFFE1_DATA	
GPIO_101	CH0_SSBI_RX	
GPIO_102	CH0_SSBI_TX_GPS	
GPIO_103		
GPIO_104	TOP_AMP_BOOST_BP	
GPIO_105	GPS_EXT_LNA_EN	
GPIO_106	KB_VOL_UP	V
GPIO_107	KB_VOL_DOWN	V

GPIO	Net Name	Wakeup
GPIO_108		V
GPIO_109	HALL_SENSOR_INT	V
GPIO_110		V
GPIO_111		V
GPIO_112	TOP_AMP_BOOST_EN	
GPIO_113	FORCE_USB_BOOT	V
GPIO_114	FCAM_AVDD_EN	
GPIO_115		V
GPIO_116		
GPIO_117		V
GPIO_118		
GPIO_119		V
GPIO_120		

Function	IC	I2C Address
Gyro	BMG160	0x68
G-Sensor	BMC150	0x11
E-Compass	BMC150	0x13
PS+ALS	STK3310	0x48
Backlight	LM3630ATMX	0x38
TP	S2716	0x20
Flash LED Driver	LM3642TLX NOPB	0x63
Rear Cam.	IMX179QQH5-C	0x10
Front Cam.	IMX132TQH5-C	0x36
LCM Bias	TPS65132B0YFFR	0x3E

FIH Confidential and Proprietary

Title: **GPIO/I2C LIST**

Size: A3 | Document Number: Titan LTE | Rev: MP

Date: Thursday, November 13, 2014 | Sheet 3 of 35

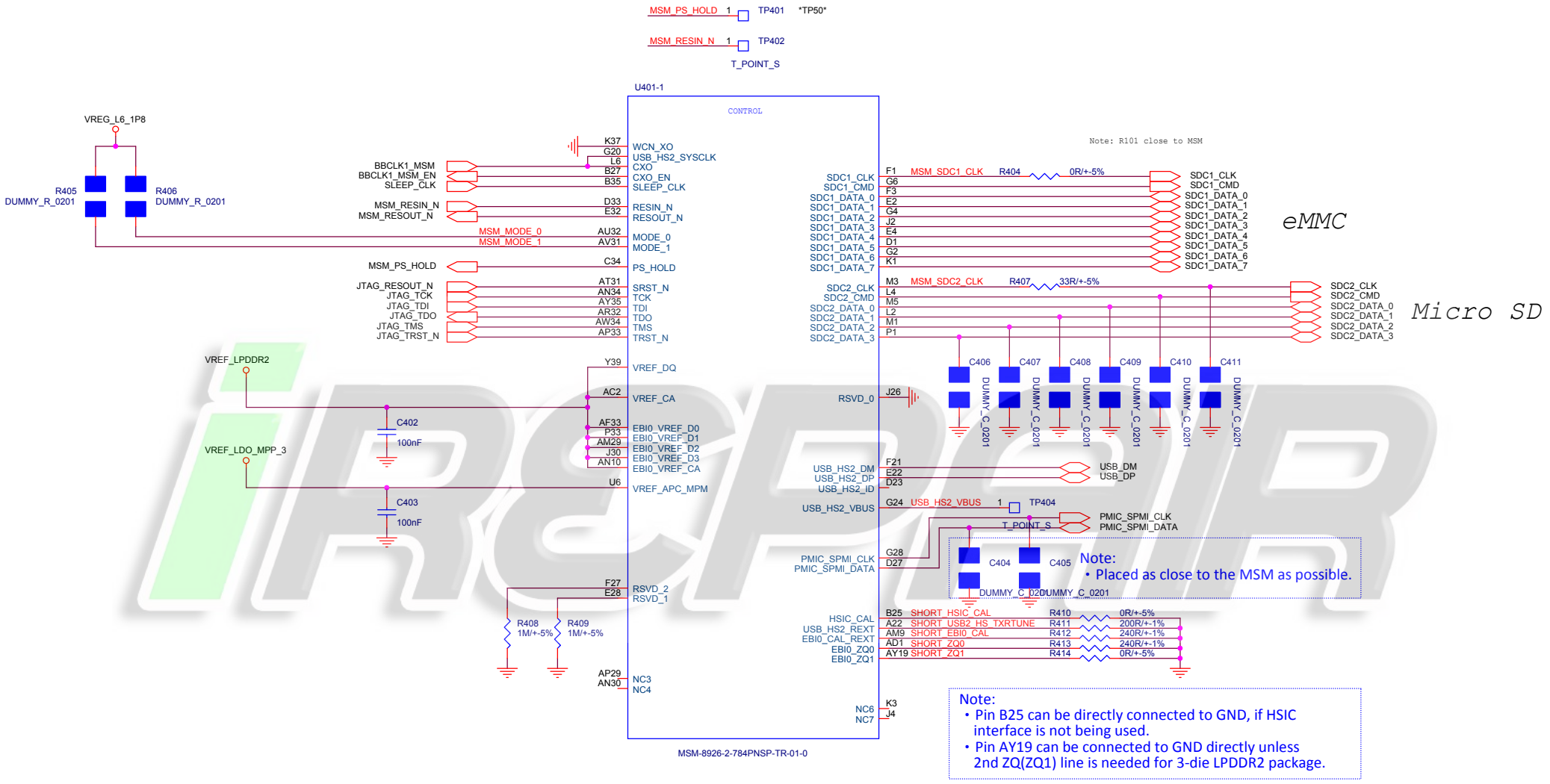

FIH Confidential and Proprietary

Title	MSM8926_CONTROL/USB/SDC	
Size A3	Document Number Titan LTE	Rev MP
Date: Thursday, November 13, 2014	Sheet 4 of 35	

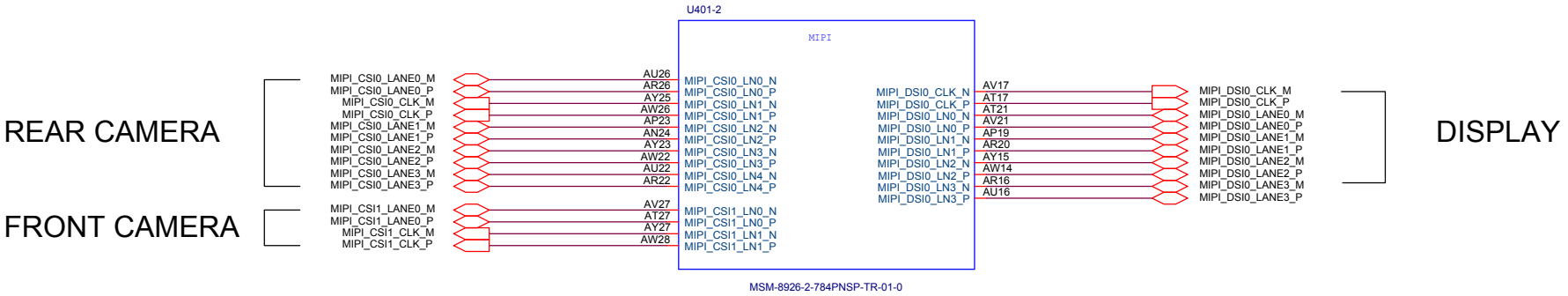

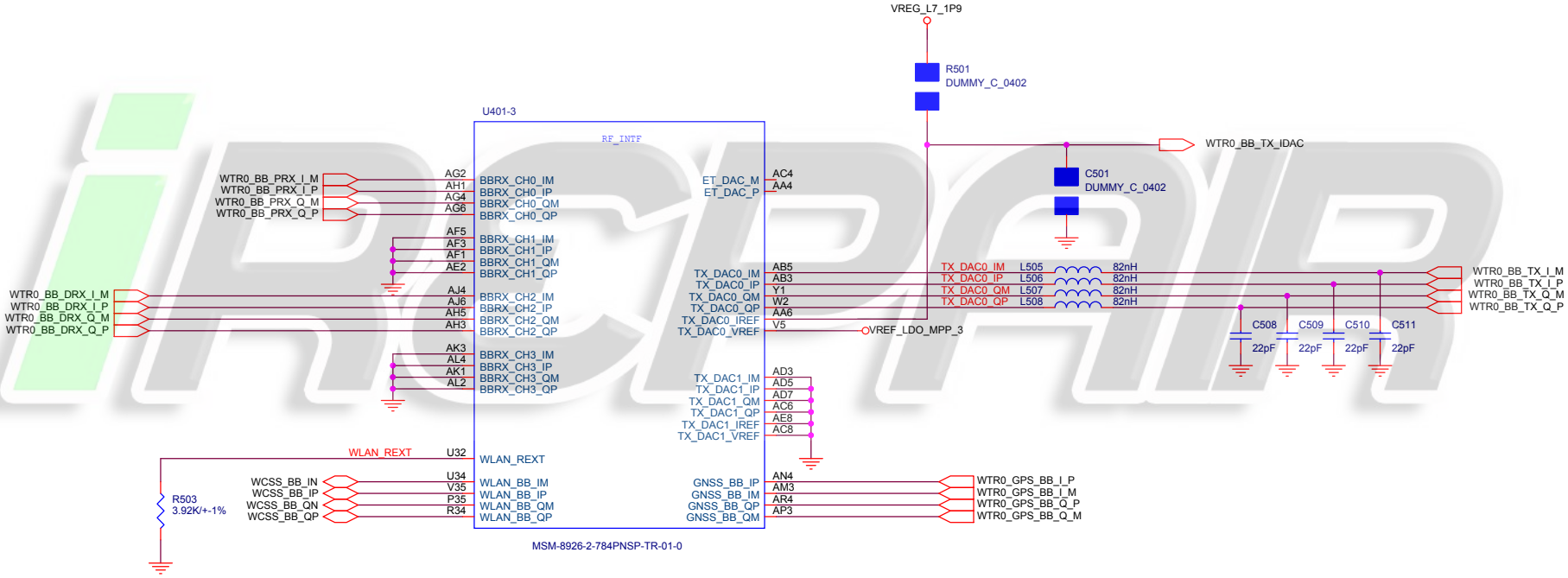

I/Q Usage Scenarios	ET	VDD A2 (pin AD9)	TX DAC1 I/Q	ETDAC P/M	TX DAC1 IREF	TX DAC1 VREF
TX DAC1 I/Q Unused	ET Unused	GND	GND	Floating	GND	GND

iRCPAIR

FIH Confidential and Proprietary

Title: MSM8926_MIPI/RF

Size: A3 | Document Number: Titan LTE | Rev: MP

Date: Thursday, November 13, 2014 | Sheet 5 of 35

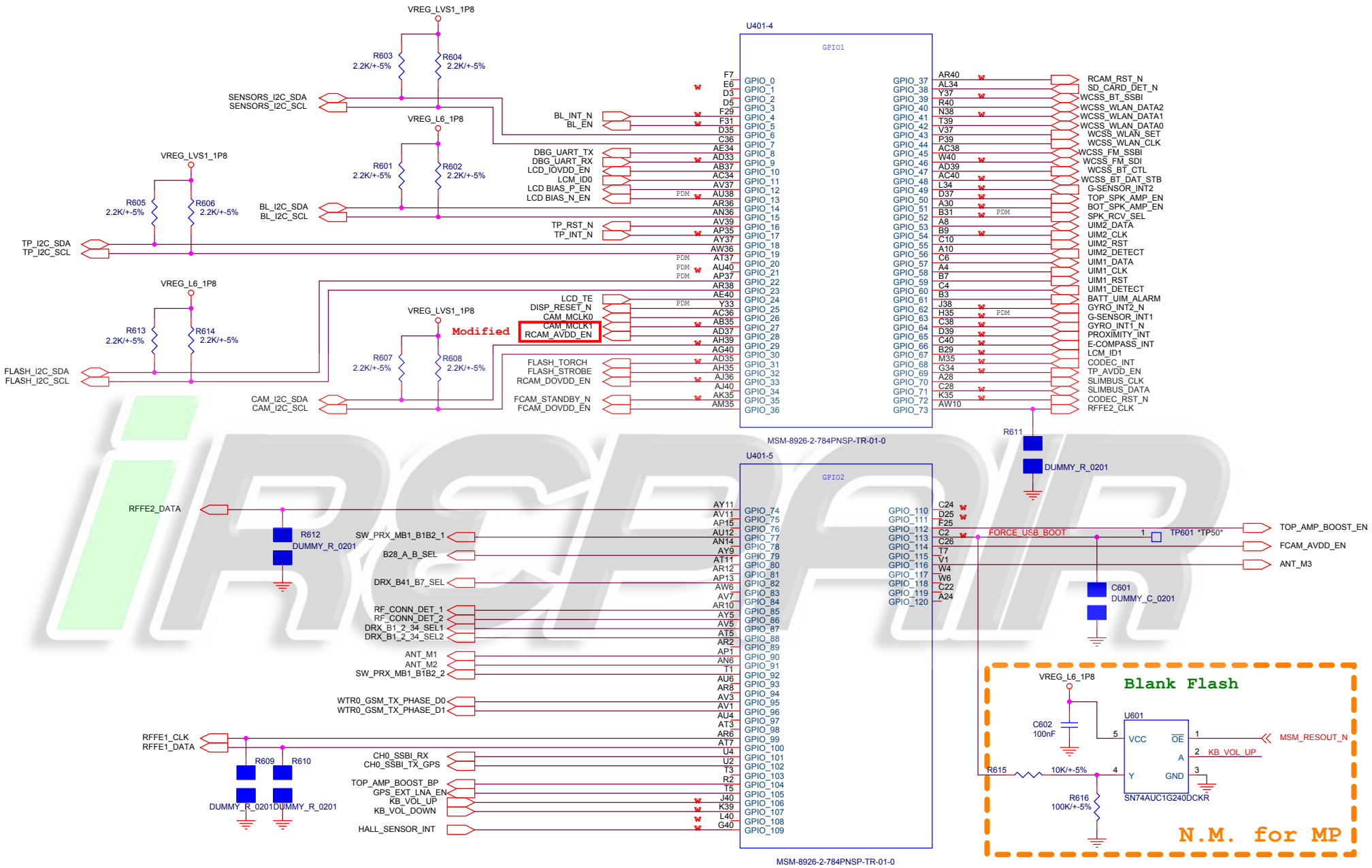

GPIOs	Corresponding fuse	Function
GPIO[82]	FAST_BOOT[1]	The fast boot options configure the external boot device used to boot from,
GPIO[83]	FAST_BOOT[2]	as shown in the table below.
GPIO[84]	FAST_BOOT[3]	Development board - BOOT_CONFIG general-purpose input/output (GPIOs) should be used.
GPIO[85]	FAST_BOOT[4]	Production board - FAST_BOOT fuses should be blown.

BOOT_CONFIG [4:1]	MAPPING
0b00000	eMMC (default) at SDC1, followed by USB from SDC2
0b00001	SDC2 followed by SDC1
0b00010	eMMC at SDC1
0b00011	USB

MSM Boot Config Pin: Internal PD

FORCE_USB_BOOT (GPIO_113) is checked first during the boot device detection prior to BOOT_CONFIG GPIOs.

GPIO_113 = 1 will force the MSM device to boot from USB_HS port.

The fuse FORCE_USB_BOOT_DISABLE can be blown to disable the feature to force USB boot using GPIO_113.

FIH Confidential and Proprietary

Title: MSM8926 GPIO

Size: A3 | Document Number: Titan LTE | Rev: MP

Date: Thursday, November 13, 2014 | Sheet 6 of 35

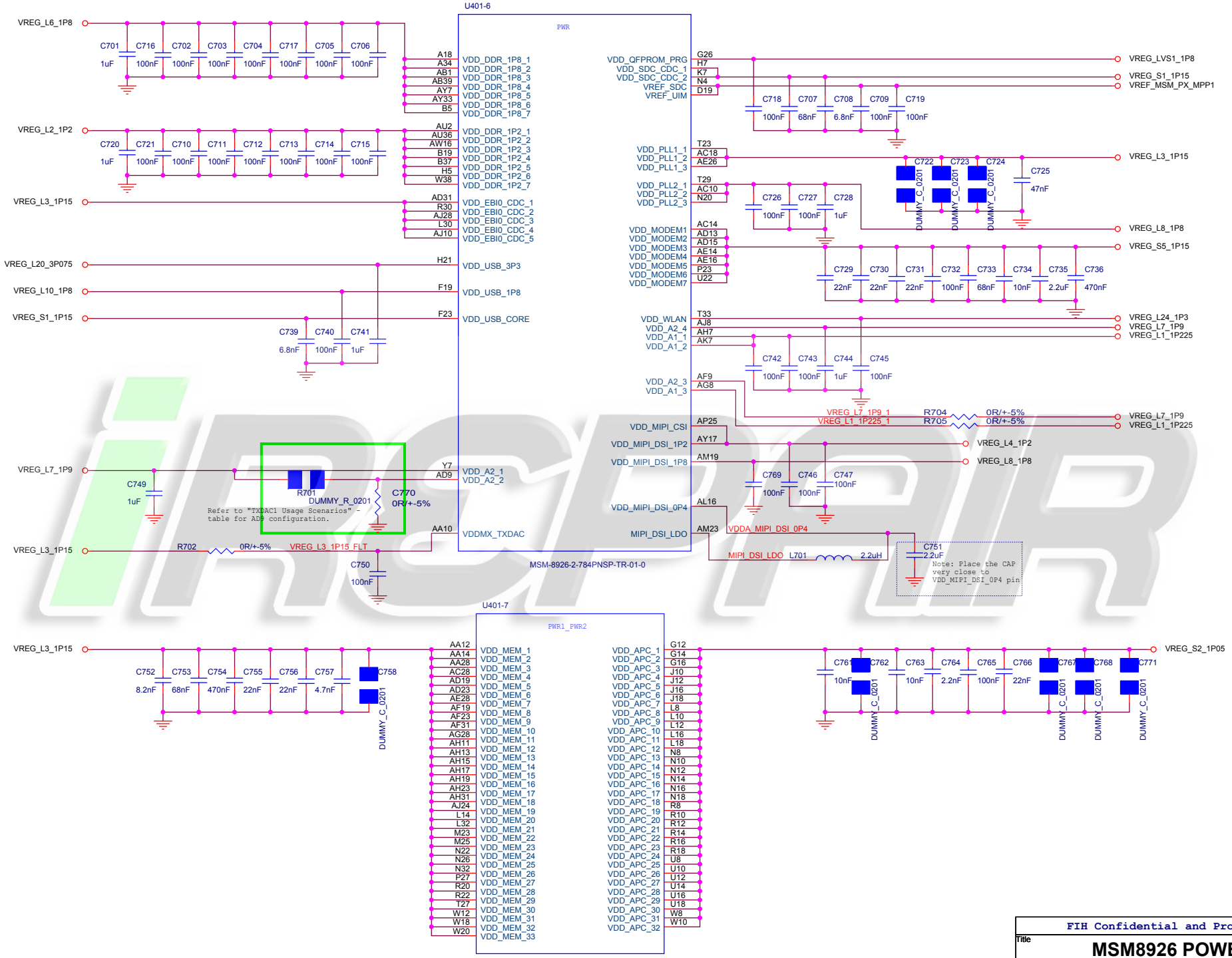

iRepair

FIH Confidential and Proprietary

Title	MSM8926 POWER-1
Size A3	Document Number Titan LTE
Rev	MP
Date: Thursday, November 13, 2014	Sheet 7 of 35

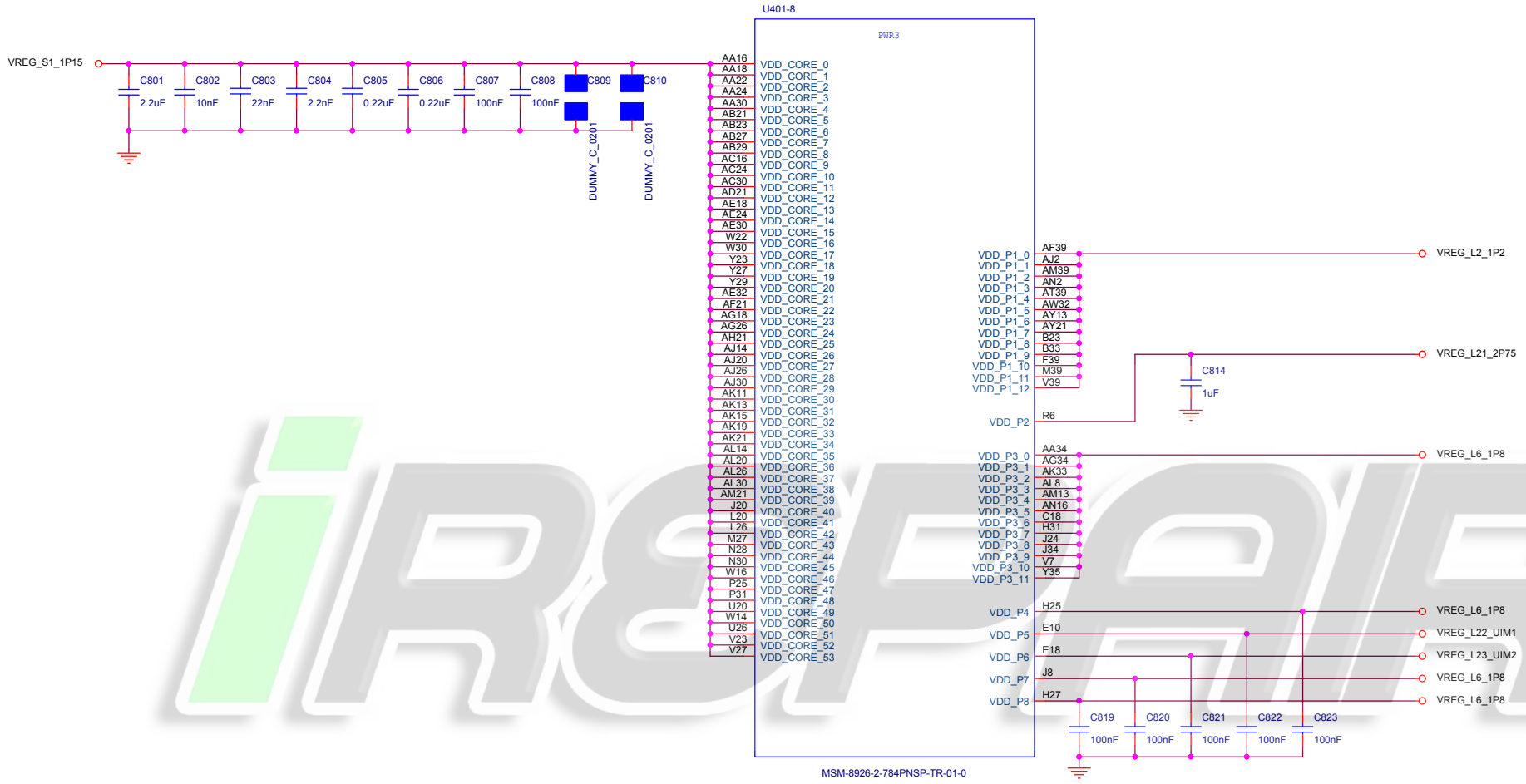

FIH Confidential and Proprietary

Title	MSM8926 POWER-2	
Size A3	Document Number Titan LTE	Rev MP
Date: Thursday, November 13, 2014	Sheet 8 of 35	

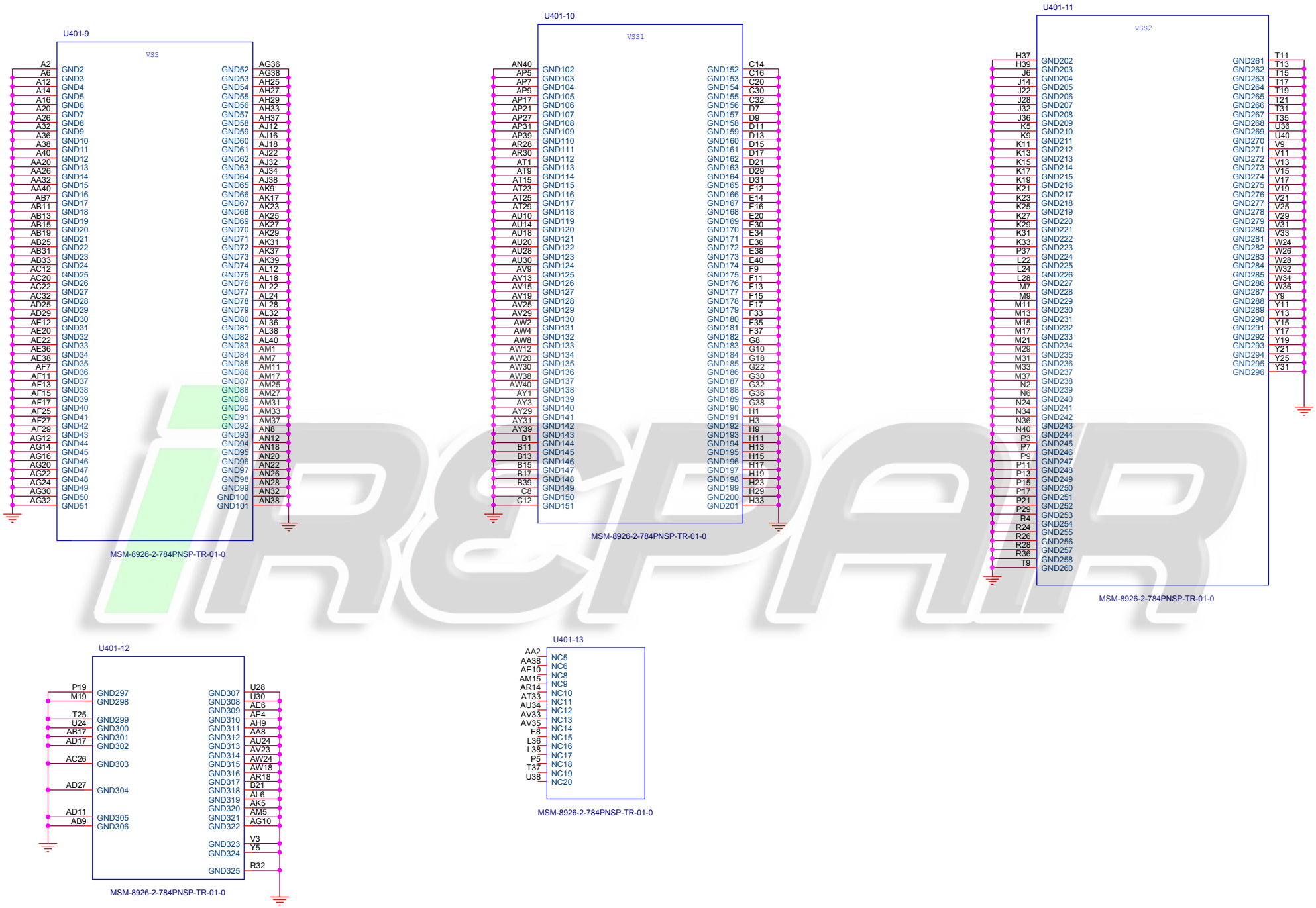

FIH Confidential and Proprietary

Title	MSM8926 GND	
Size A3	Document Number Titan LTE	Rev MP
Date: Thursday, November 13, 2014	Sheet 9 of 35	

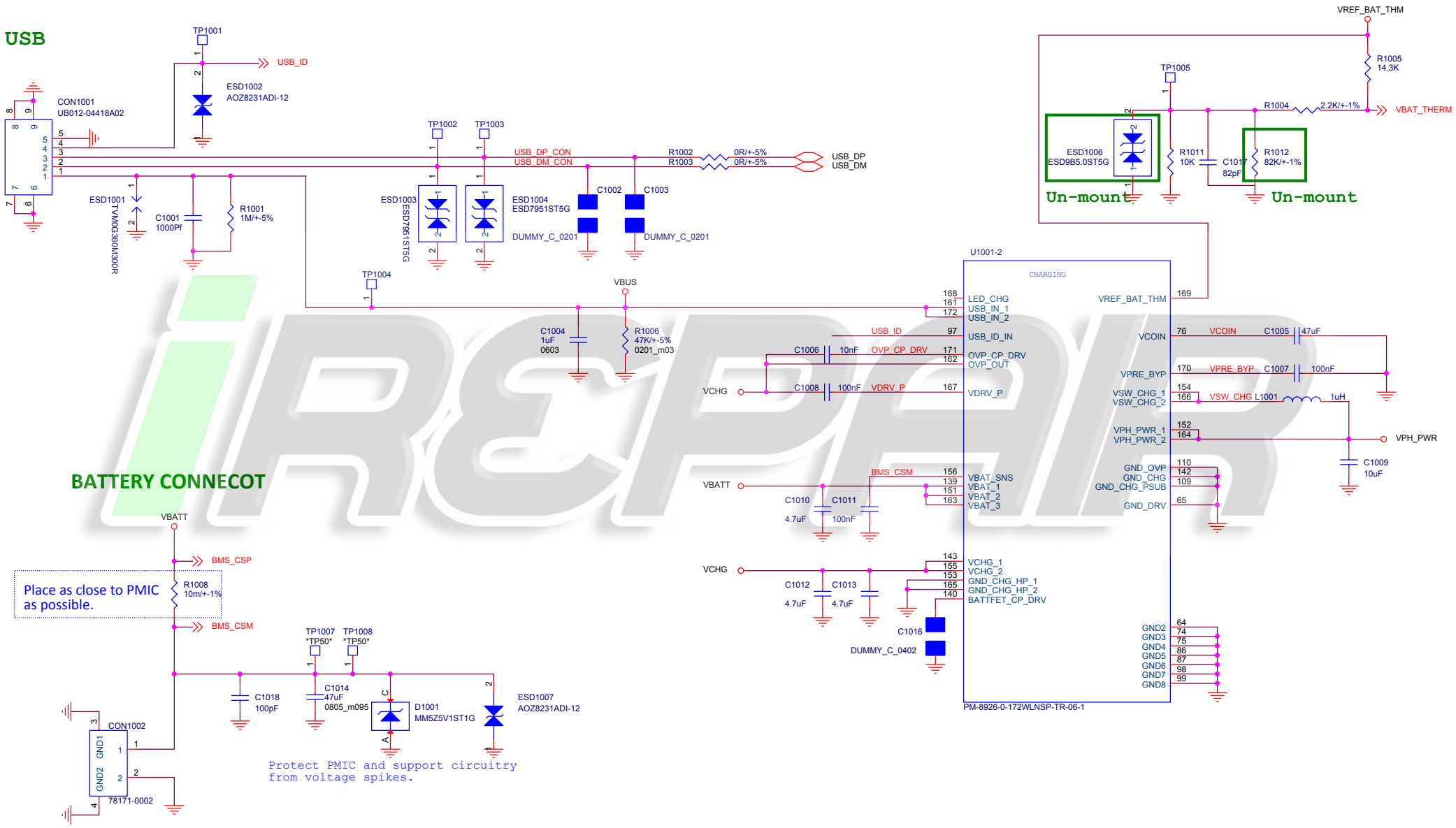

iREPAIR

FIH Confidential and Proprietary

Title	PM8926_CHARGING	
Size A3	Document Number Titan LTE	Rev MP
Date: Thursday, November 13, 2014	Sheet 10 of 35	

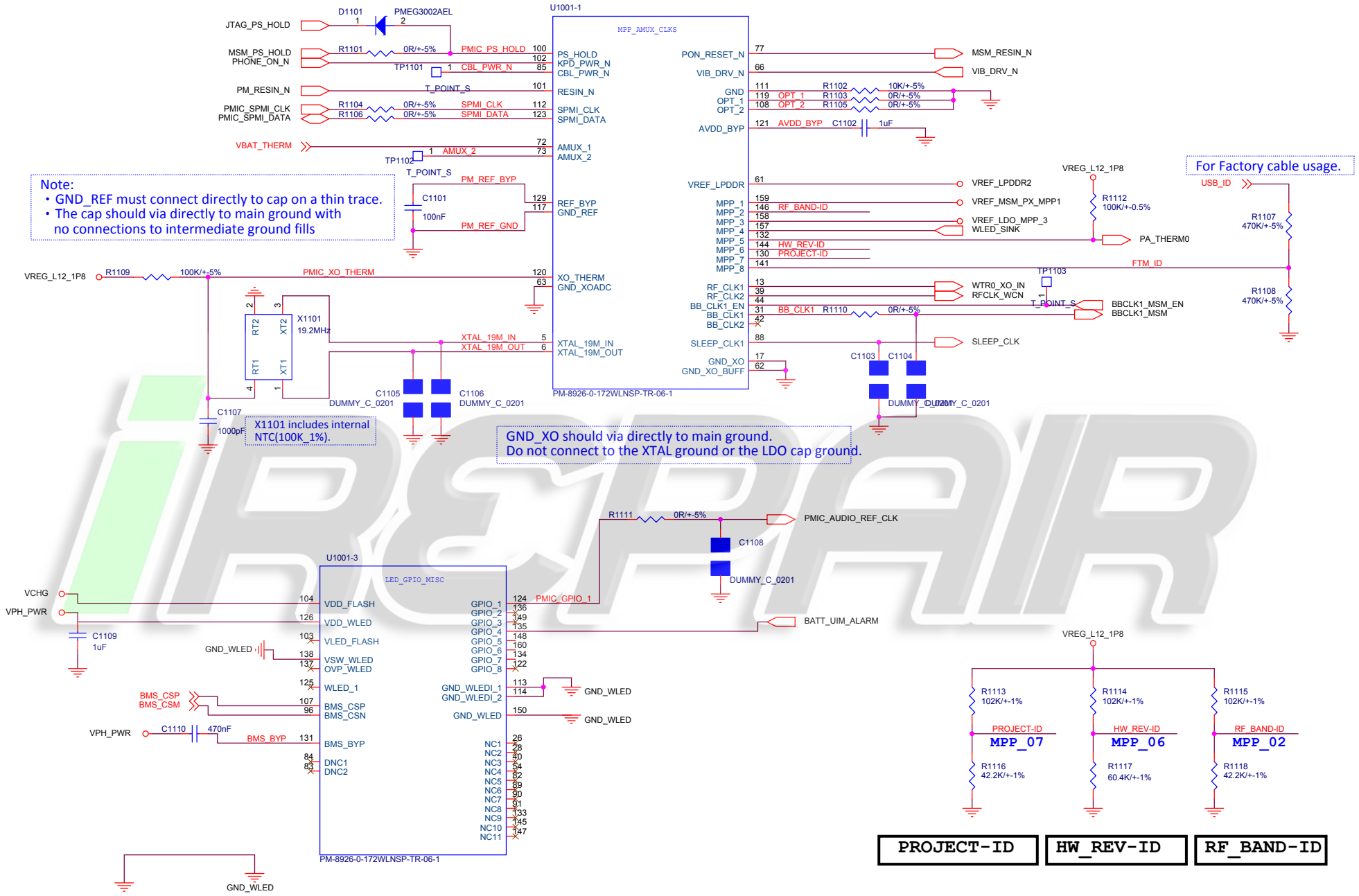

Note:0.1R shunts are for proto only.

FIH Confidential and Proprietary

Title	PM8926_CONTROL/CLK/GPIO
Size A3	Document Number: Titan LTE
Rev	MP
Date:	Thursday, November 13, 2014
Sheet	11 of 35

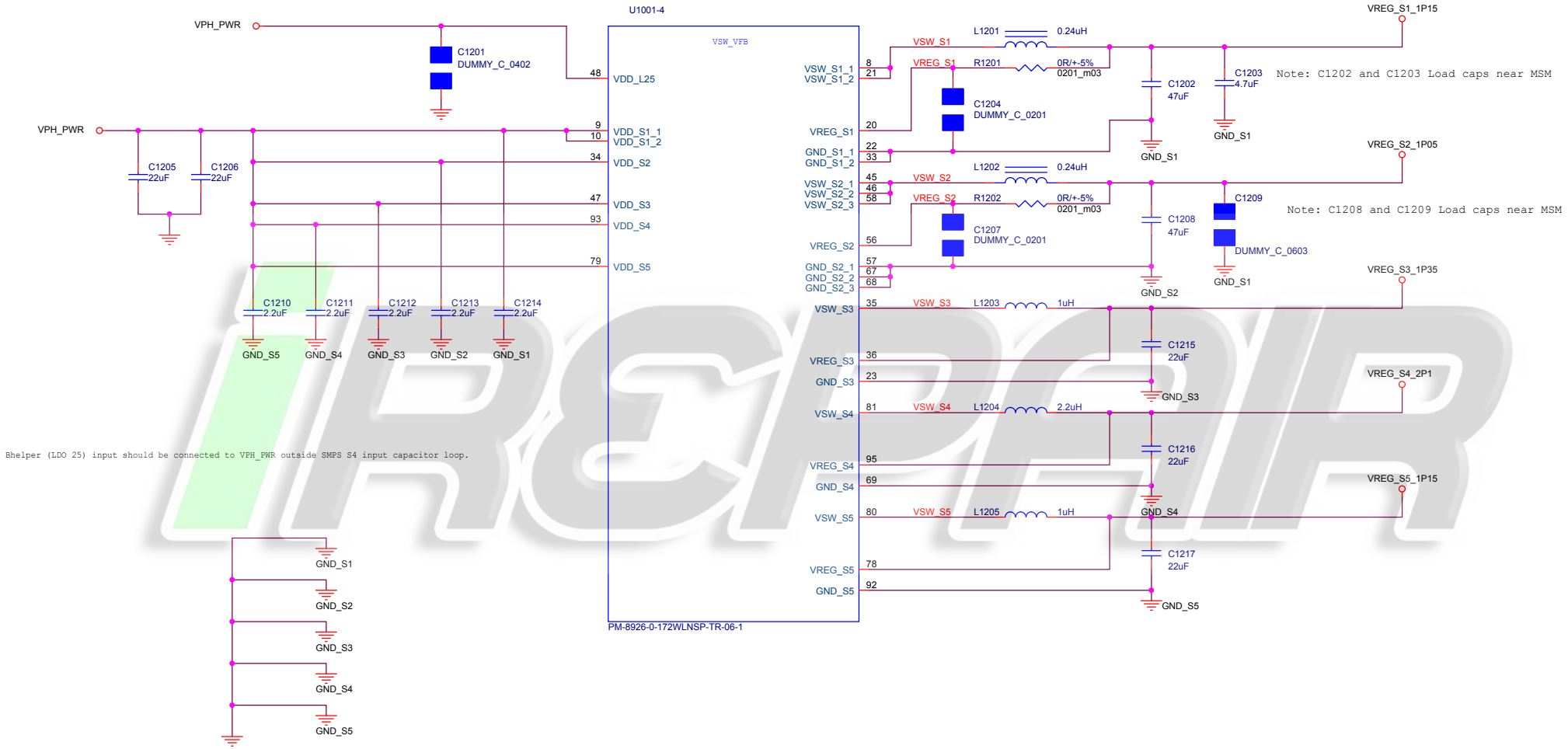

Note:0.1R shunts are for proto only.

FIH Confidential and Proprietary

Title	PM8926_SMPS	
Size A3	Document Number Titan LTE	Rev MP
Date: Thursday, November 13, 2014	Sheet 12 of 35	

RF power notice

WTR1625L: VREG_L9_2P05 , VREG_L1_1P225, VREG_L10_1P8

WCN3620: VREG_L6_1P8, VREG_L16_3P0, VREG_L24_1P3, VREG_L10_1P8(XO)

RF switch power: VDD_SWITCH_2P65(VREG_L14_2P75)

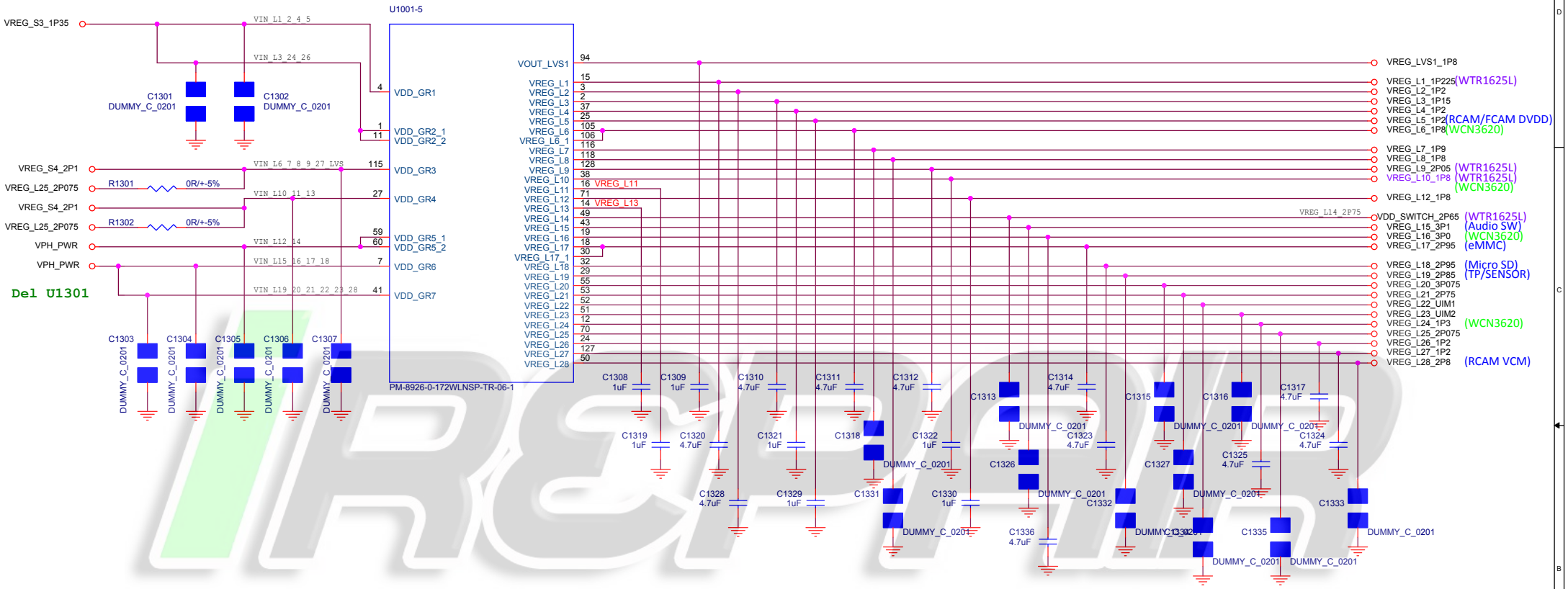

FIH Confidential and Proprietary

Title	PM8926_LDO	
Size A3	Document Number Titan LTE	Rev MP
Date: Thursday, November 13, 2014	Sheet 13 of 35	

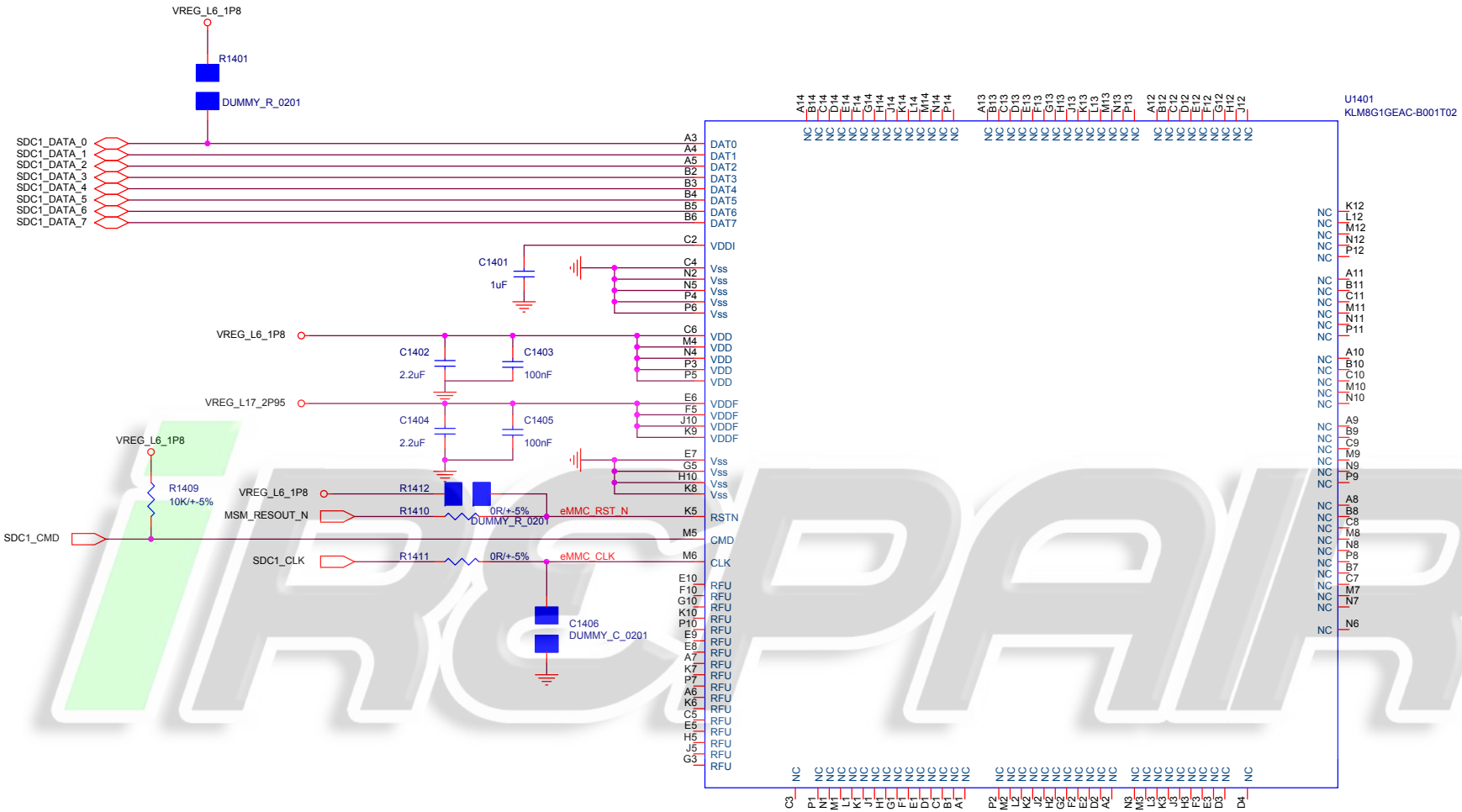

U1402-POP
LPDDR2-8Gb EDB8132B3PB-1D-F (SA0B8132010)

FIH Confidential and Proprietary

Title	eMMC/LPDDR2	
Size A3	Document Number Titan LTE	Rev MP
Date: Thursday, November 13, 2014	Sheet 14 of 35	

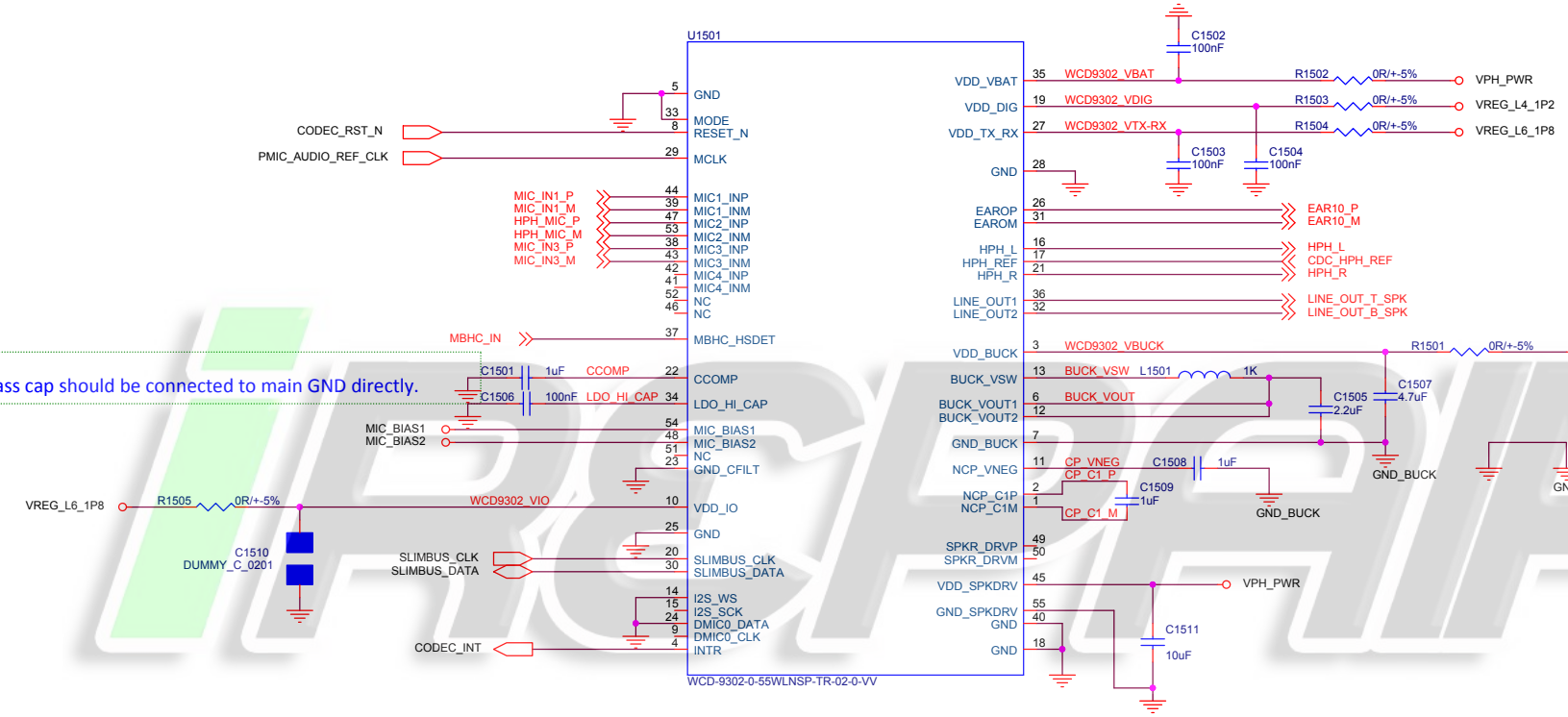

Note:
This bypass cap should be connected to main GND directly.

Note:
- Pin 18, 23 and pin 40 should be connected to main GND directly.
- Pin 55 should be connected to the GND side of C1511 and directly connected to the main GND with dedicated vias.

FIH Confidential and Proprietary		
Title	WCD9302	
Size A3	Document Number Titan LTE	Rev MP
Date: Thursday, November 13, 2014	Sheet 15 of 35	

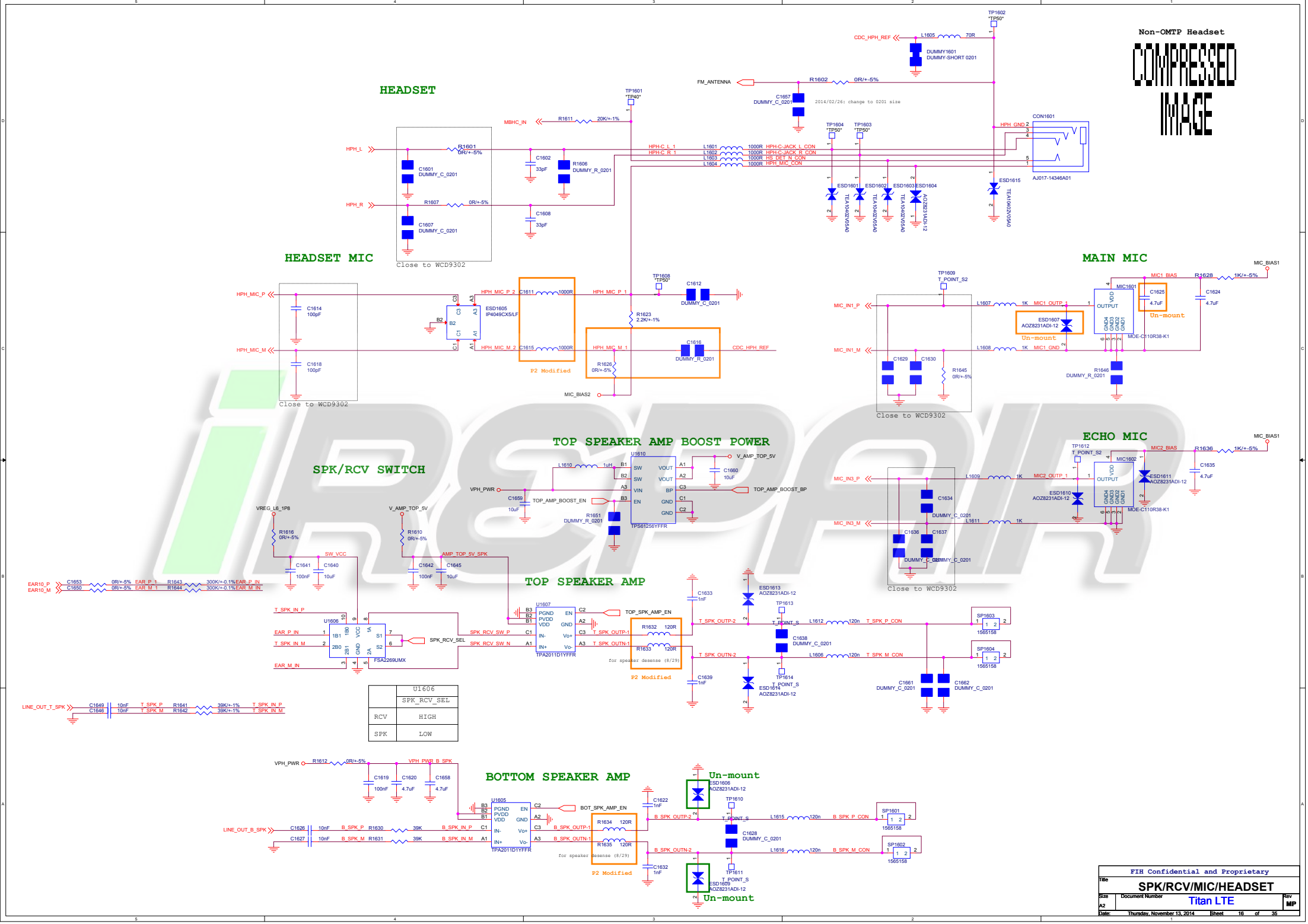

U1606	
SPK_RCV_SEL	
RCV	HIGH
SPK	LOW

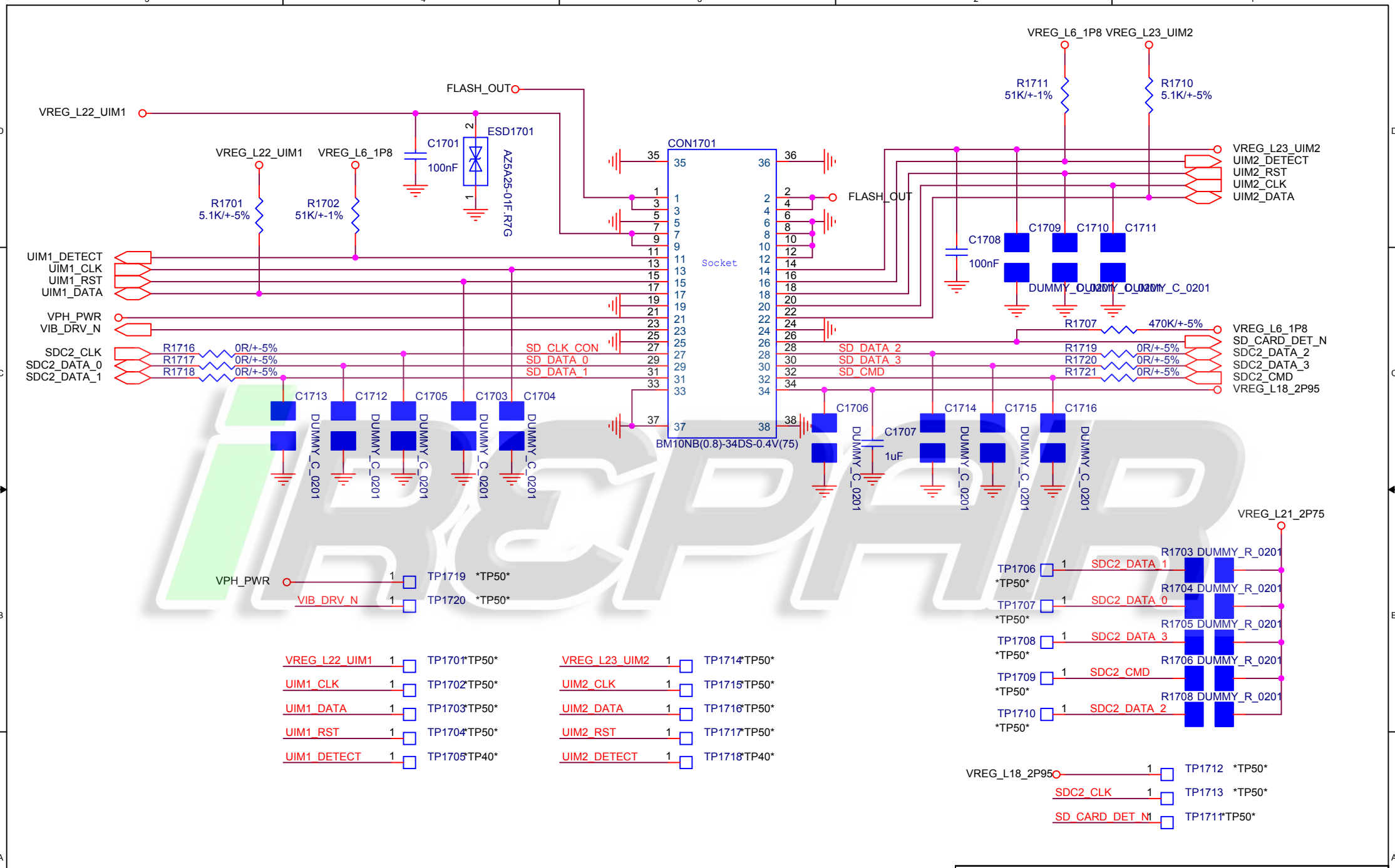

FIH Confidential and Proprietary

Title	SIM/SD/VIBRATOR/FLASH LED	
Size A4	Document Number Titan LTE	Rev MP
Date: Thursday, November 13, 2014	Sheet 17 of 35	

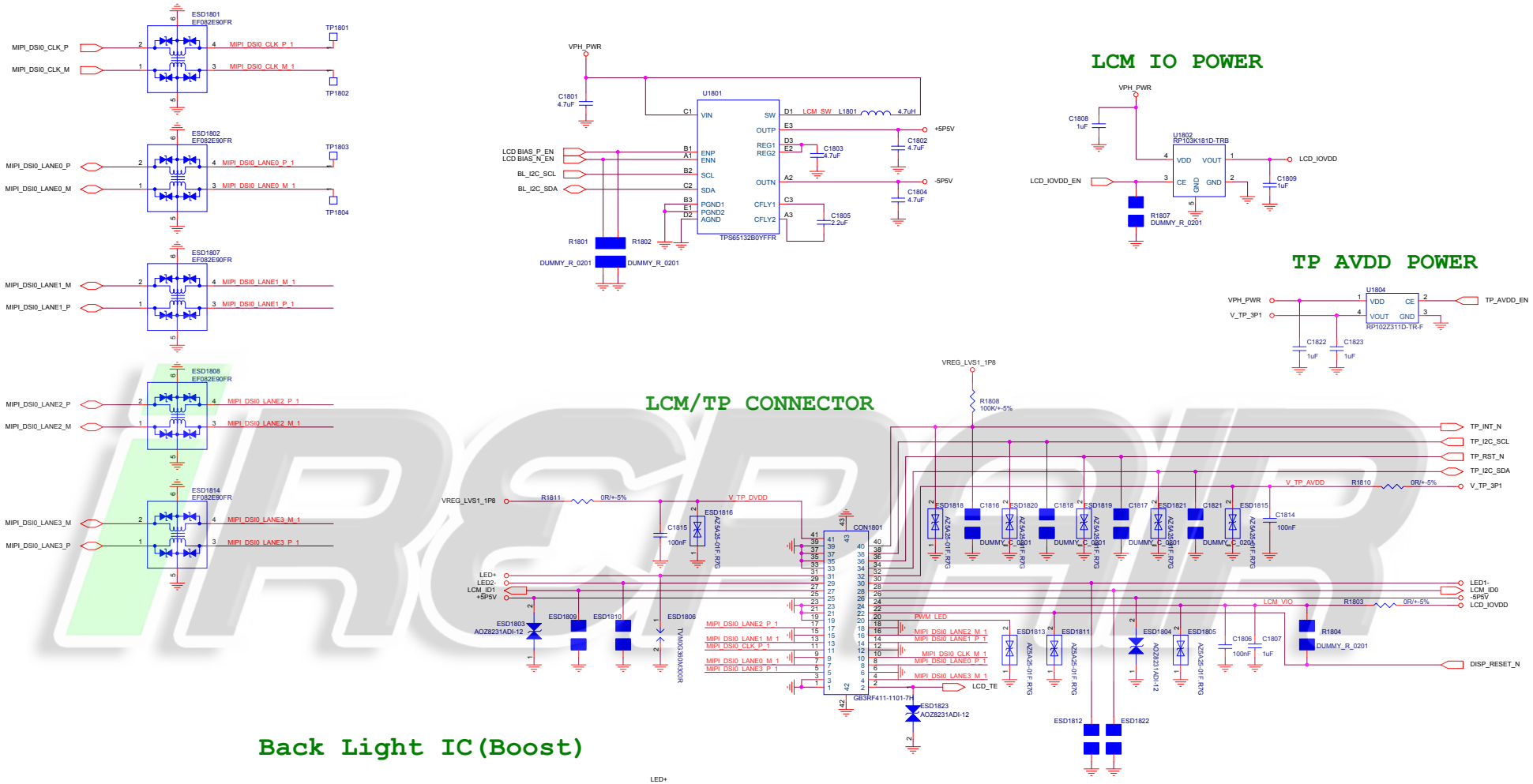

FIH Confidential and Proprietary

Title	DISPLAY/TOUCH	
Size A2	Document Number Titan LTE	Rev MP
Date: Thursday, November 13, 2014	Sheet 18 of 35	

REAR CAMERA MIPI EMI

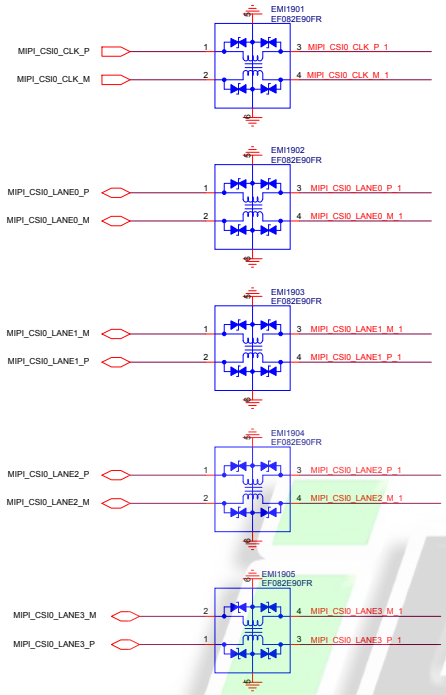

8M REAR CAMERA

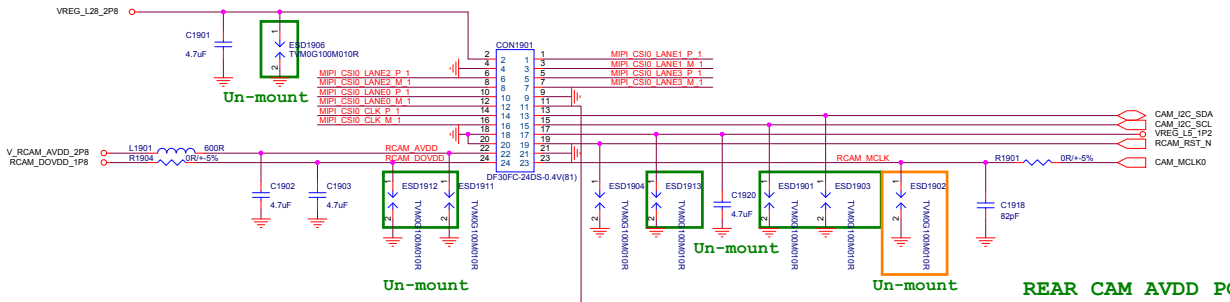

REAR CAM AVDD POWER

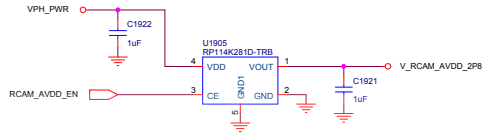

Flash LED Driver

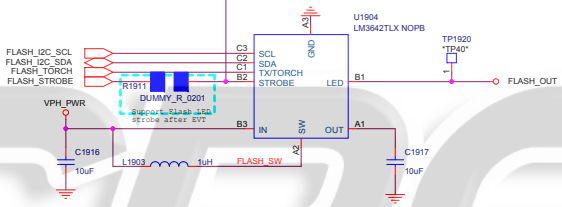

REAR CAM DOVDD POWER

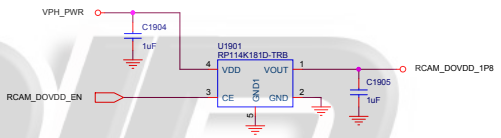

FRONT CAMERA MIPI EMI

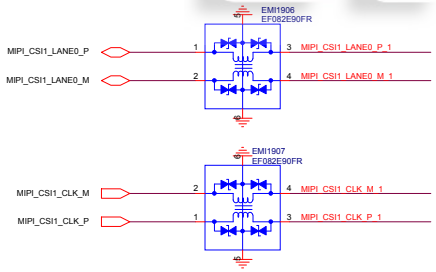

2M FRONT CAMERA

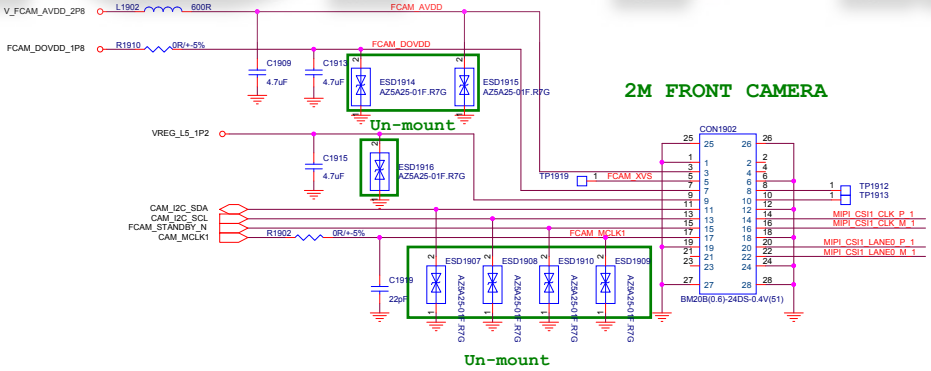

FRONT CAM AVDD POWER

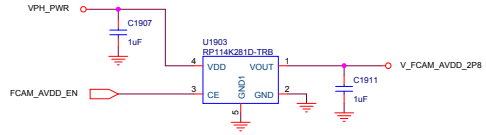

FRONT CAM DOVDD POWER

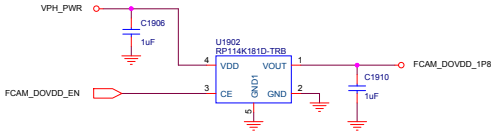

iREPAIR

FIH Confidential and Proprietary

Title	CAMERA/FLASH LED DRIVER	
Size A2	Document Number Titan LTE	Rev MP
Date: Thursday, November 13, 2014	Sheet 19 of 35	

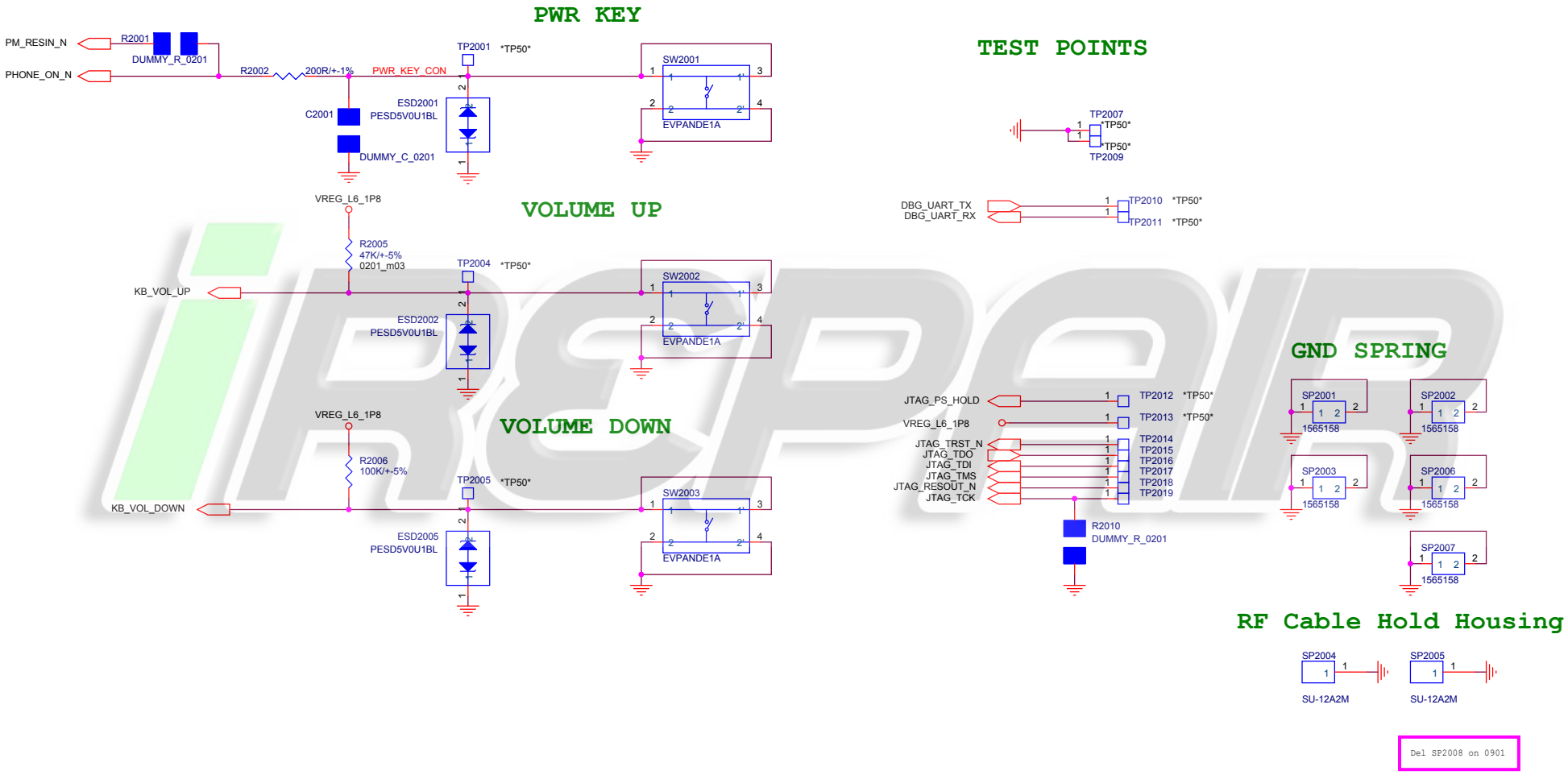

iREPAIR

FIH Confidential and Proprietary

Title	KEY/TP	
Size A3	Document Number Titan LTE	Rev MP
Date: Thursday, November 13, 2014	Sheet 20 of 35	

G-Sensor + E-Compass

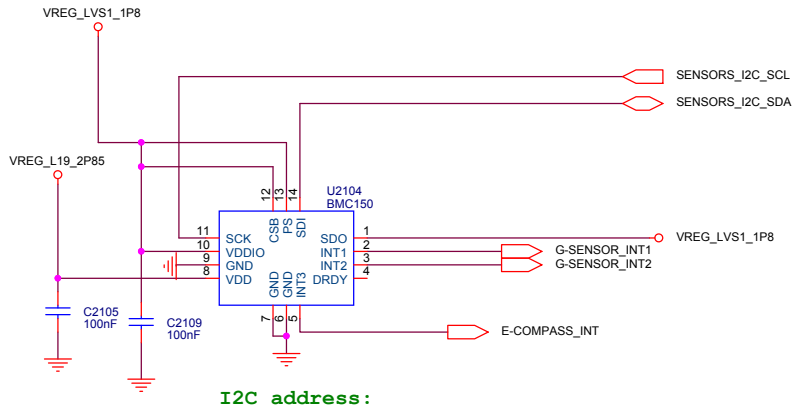

I2C address:
- SDO-->VIO
  G-Sensor: 0x11 E-Compass: 0x13
- SDO-->GND
  G-Sensor: 0x10 E-Compass: 0x12

HALL SENSOR

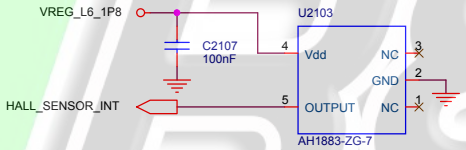

Gyro

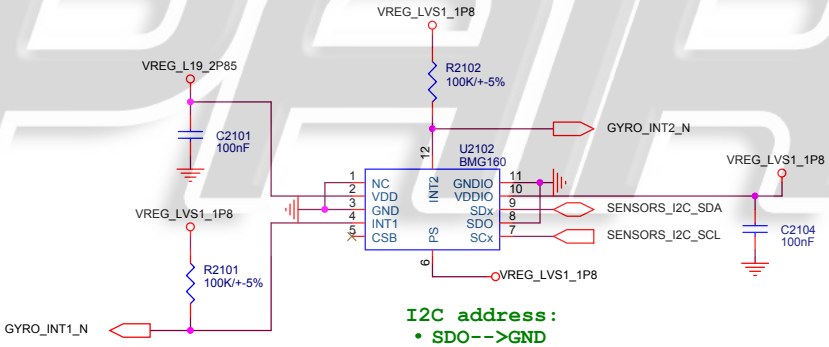

I2C address:
- SDO-->GND
  Gyro: 0x68
- SDO-->VIO
  Gyro: 0x69

P+ALS SENSOR/INDICATOR CONNECTOR

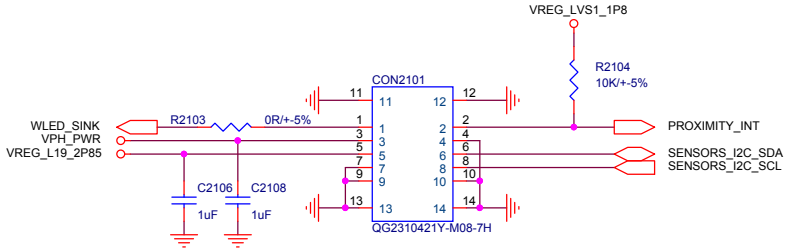

I2C address: 0x90

FIH Confidential and Proprietary

Title	SENSOR	
Size A3	Document Number Titan LTE	Rev MP
Date: Thursday, November 13, 2014	Sheet 21 of 35	

PRI ANT SWITCH

Main Antenna

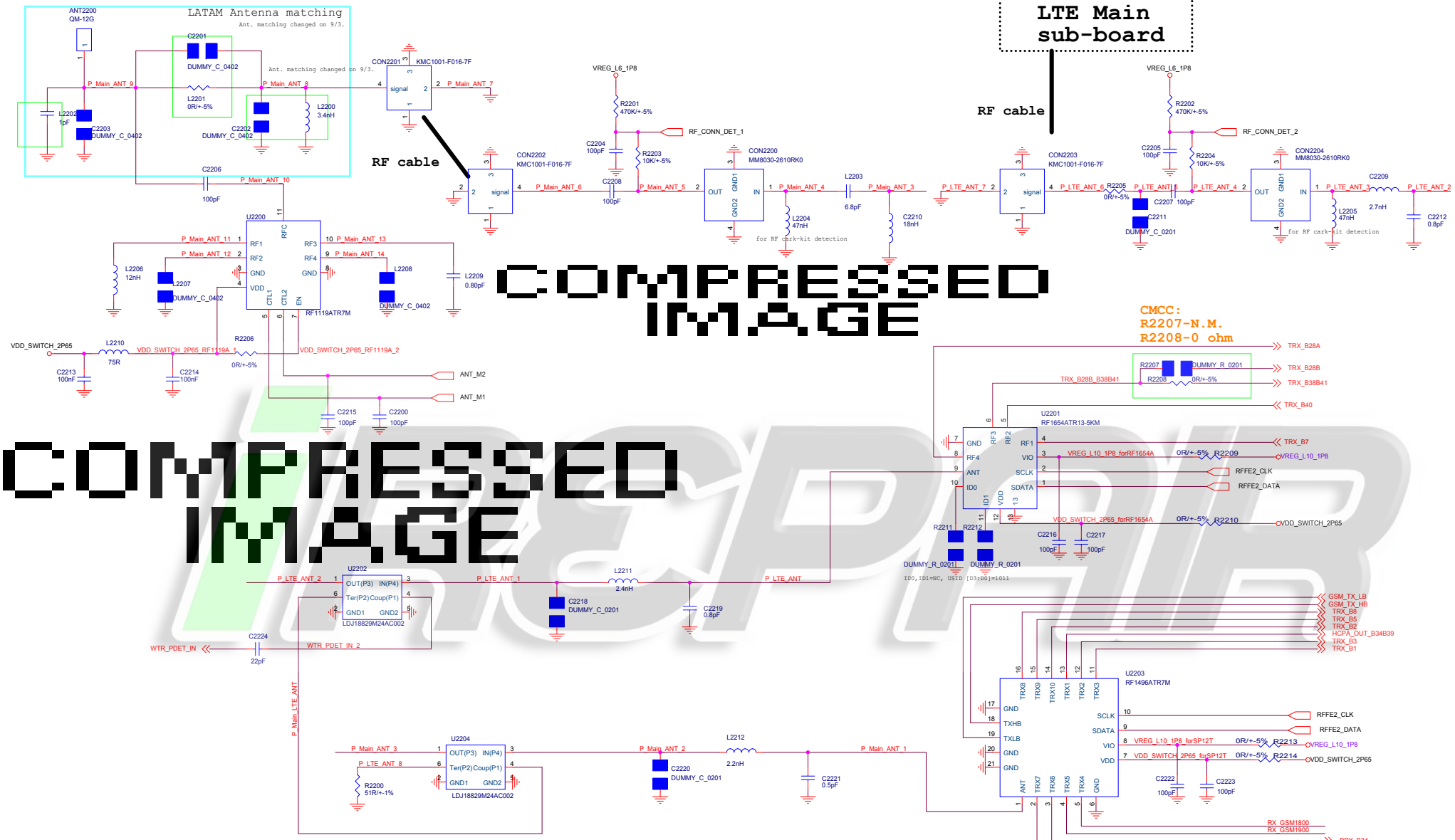

Filter No.	Pass band (MHz)	System
1	1930~1990	G1900-Rx
2	1805~1880	G1800-Rx

GSM HB RX

COMPRESSED IMAGE
COMPRESSED IMAGE

FIH Confidential and Proprietary

Title: PRI ANT SWITCH

Size: C | Document Number: Titan LTE | Rev: MP

Date: Thursday, November 13, 2014 | Sheet 22 of 35

GSM Qual band, UMTS B1/B2/B3/B5/B8/B20, B34/B39

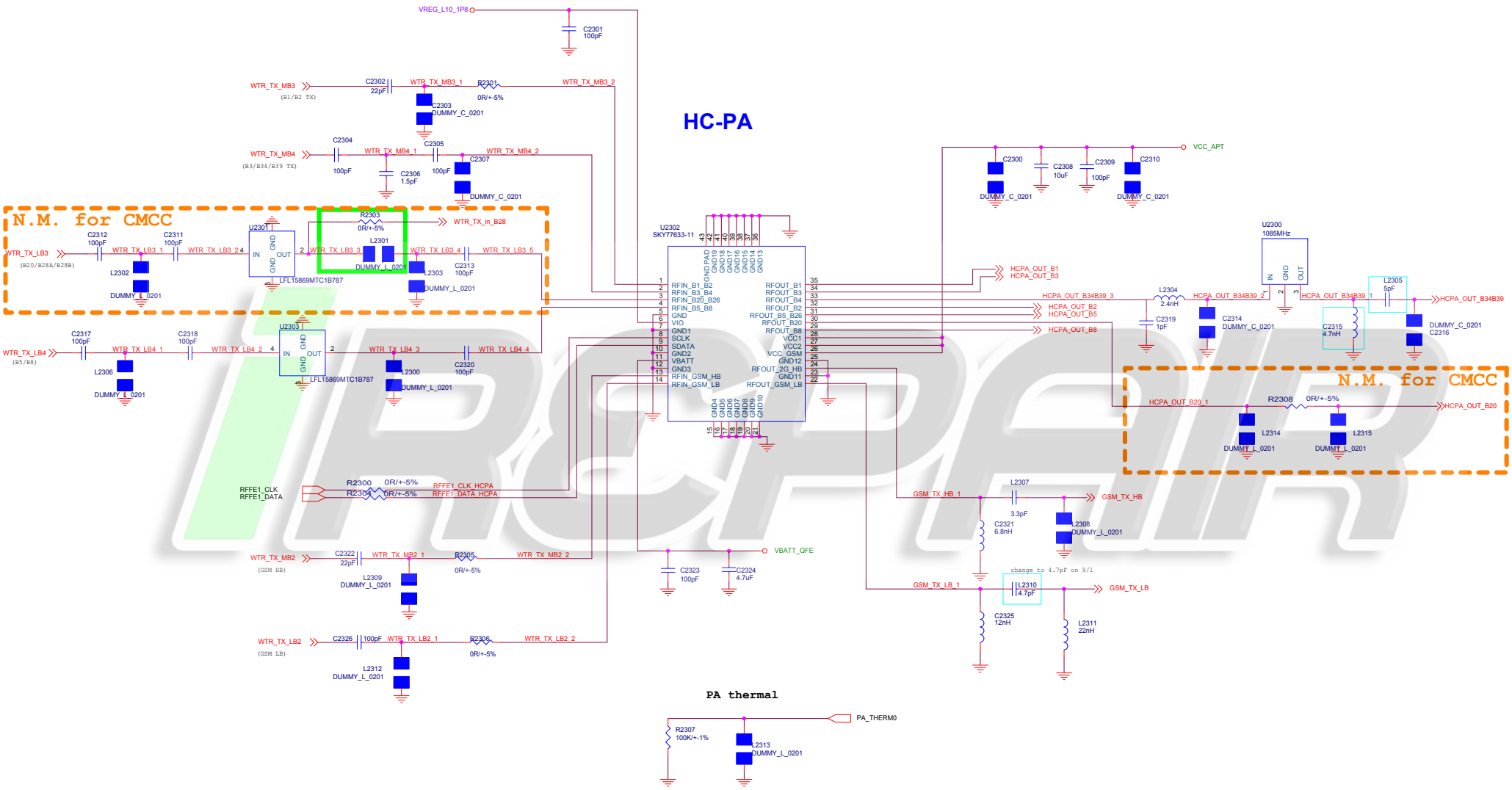

FIH Confidential and Proprietary

Title: HCPA 2G QB/B1/B2/B4/B5/B8/B20		
Size: C	Document Number: Titan LTE	Rev: MP
Date: Thursday, November 13, 2014	Sheet 23 of 35	

Duplexer B1/B2/B3/B34/B39

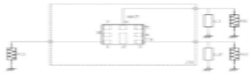

R1 : 50 ohm	L1 : 2.8 nH(Ideal inductor)
R2 : 50 ohm	L2 : 8 nH(Ideal inductor)
R3 : 50 ohm	

FDD B1 TRX

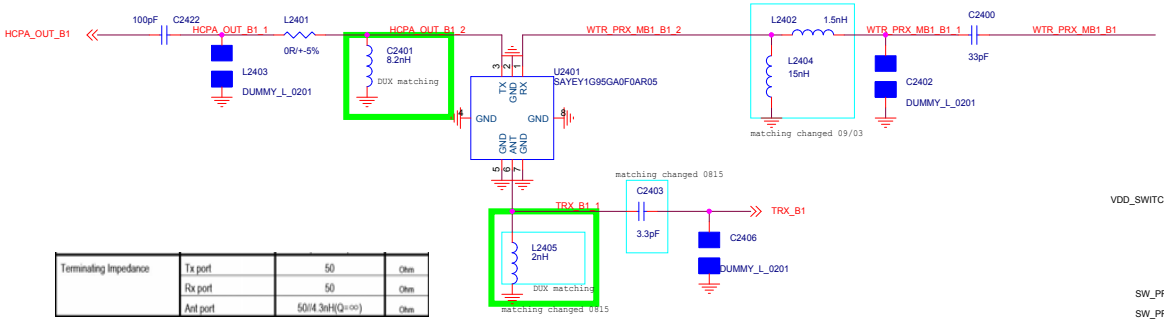

Terminating Impedance			
	Tx port	50	Ohm
	Rx port	50	Ohm
	Ant port	50//4.3nH(Q=∞)	Ohm

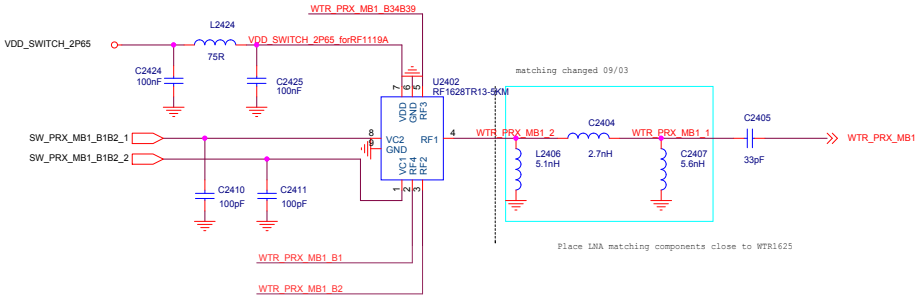

FDD B2 TRX

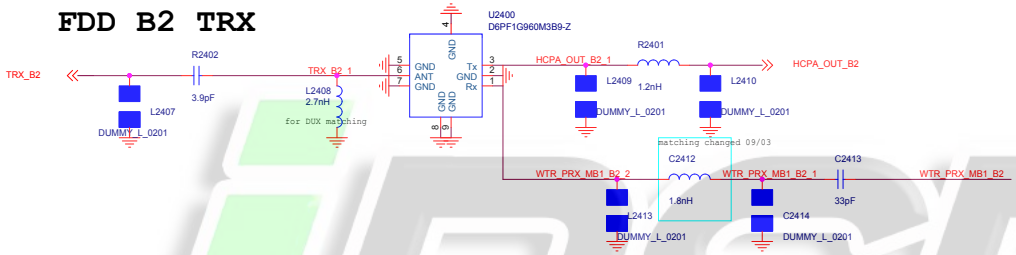

B34/B39 PRX

Need the footprint

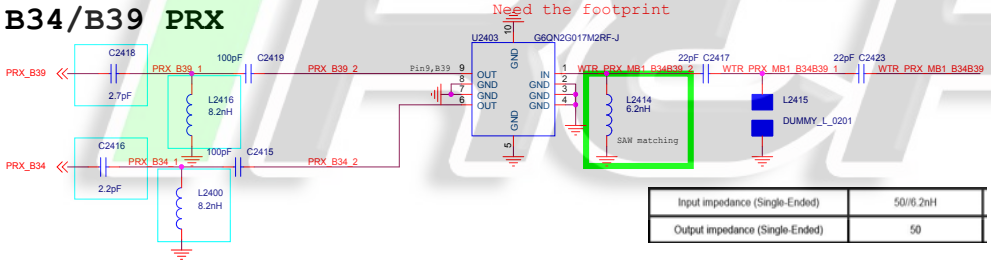

Input impedance (Single-Ended)	50//6.2nH
Output impedance (Single-Ended)	50

FDD B3 TRX

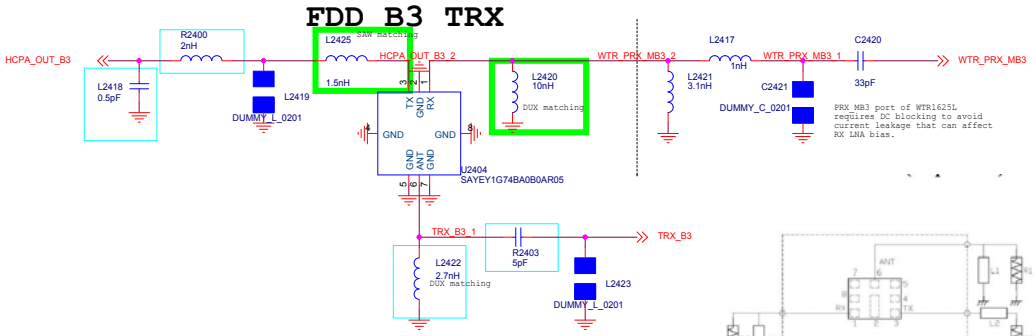

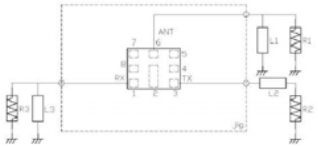

R1 : 50 ohm L1 : 3.9 nH(Ideal inductor)
R2 : 50 ohm L2 :series 1.5 nH(Ideal inductor)
R3 : 50 ohm L3 : 10 nH(Ideal inductor)

FIH Confidential and Proprietary

Title	Duplexer B1/B2/B3/B34/B39		
Size C	Document Number Titan LTE		Rev MP
Date: Thursday, November 13, 2014	Sheet 24 of 35		

QFE1101

80-NA437-46 Rev.B

Note: QFE1100 ES2 is available end of February 2013.
QFE1100 ES2 + L3304 + C3303 changes are needed to support low voltage battery and LTE 1RB over all technology.

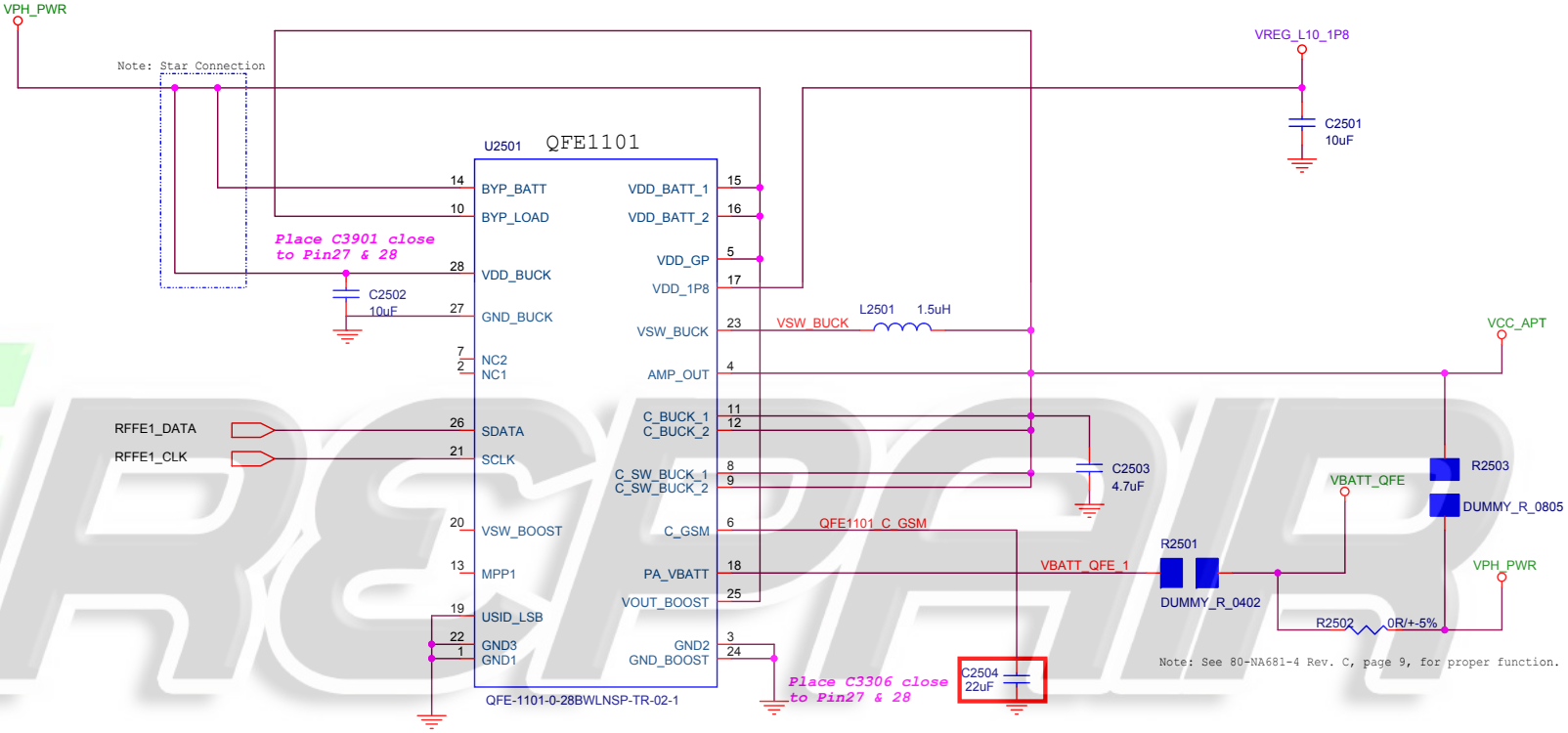

Note: QFE1100 ES2 pin 13 connection to PMIC HKADC is for ET envelope gain calibration.

Note: Pin 13 cannot be pulled up to VDD:
- If using PMIC8941, please config PMIC Internal Pull-up switch to "NC" via software setting.
- If using PMIC8019, please remove external Pull-up resistor on Baseband card.

Note: Replace with 33uF. Place second cap on back of the PWB

iREPAIR

FIH Confidential and Proprietary

Title	QFE1101	
Size B	Document Number Titan LTE	Rev MP
Date: Thursday, November 13, 2014	Sheet 25 of 35	

WTR1625(L) RFIO/INTF

PRX

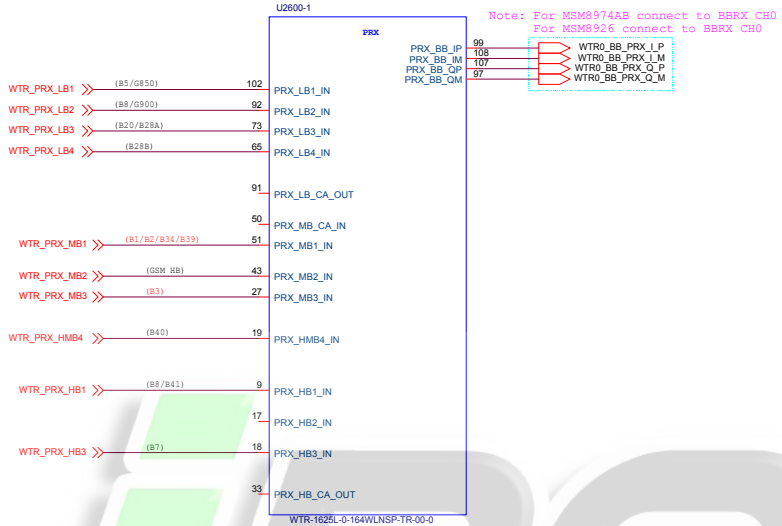

TX

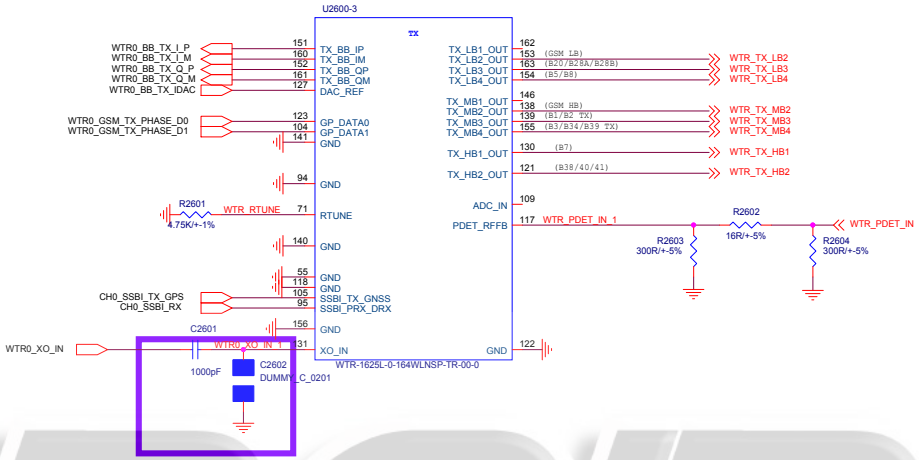

External matching for DRX.

DRX_GPS

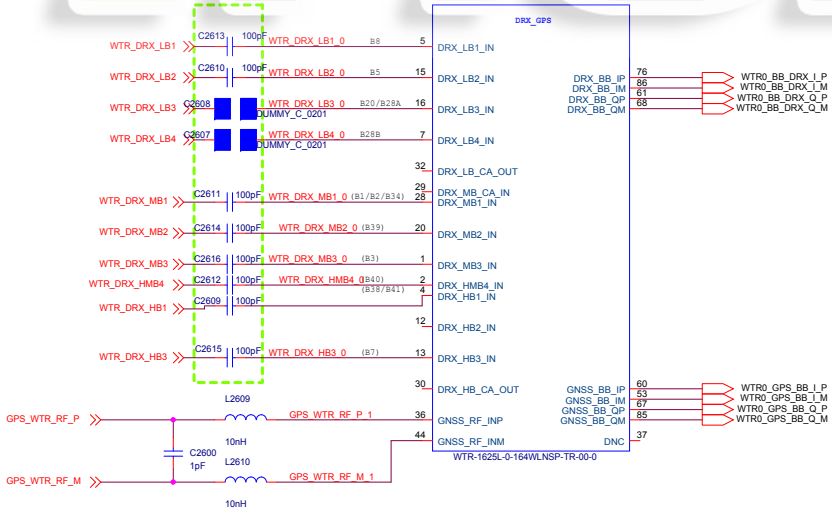

GND

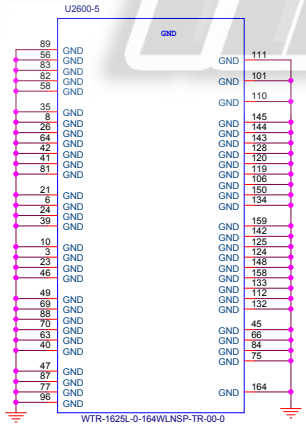

iREPAIR

WTR1625(L) PWR DISTRIBUTION

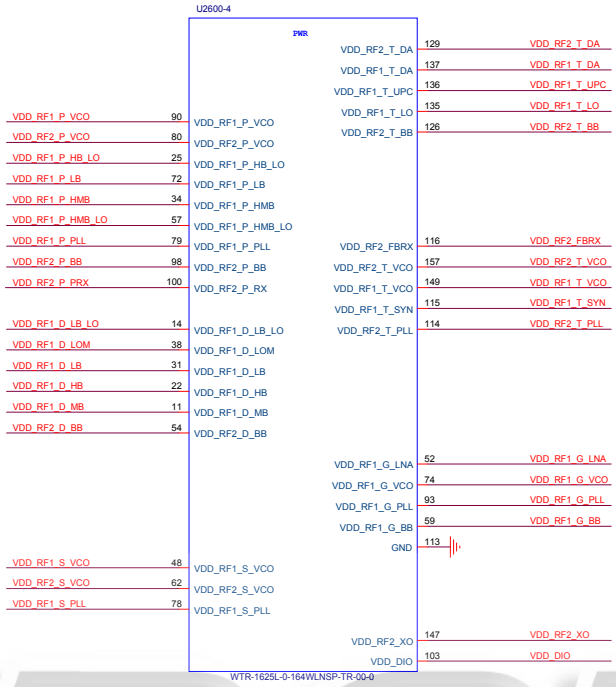

WTR POWER DISTRIBUTION 1.8V & 2V

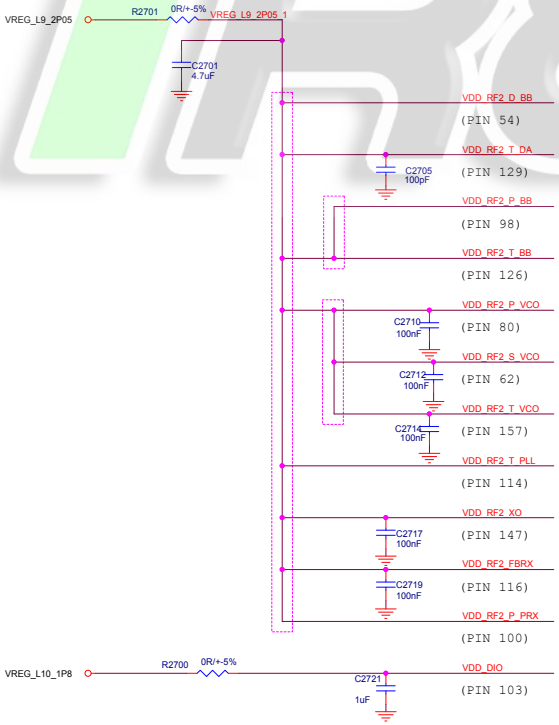

WTR POWER DISTRIBUTION 1.225V

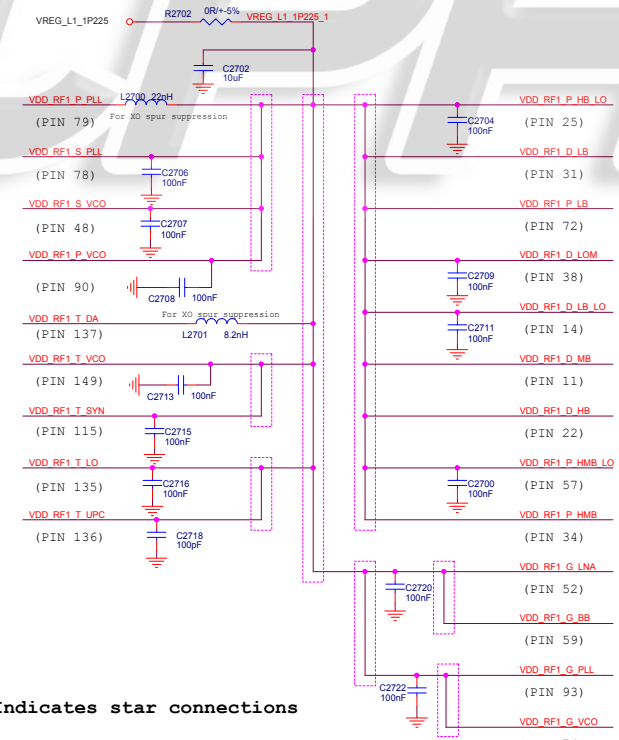

Indicates star connections

FIH Confidential and Proprietary

Title	WTR1625(L) PWR DISTRIBUTION		
Size C	Document Number Titan LTE		Rev MP
Date: Thursday, November 13, 2014	Sheet 27 of 35		

HCPA B40/B38/B41/B7

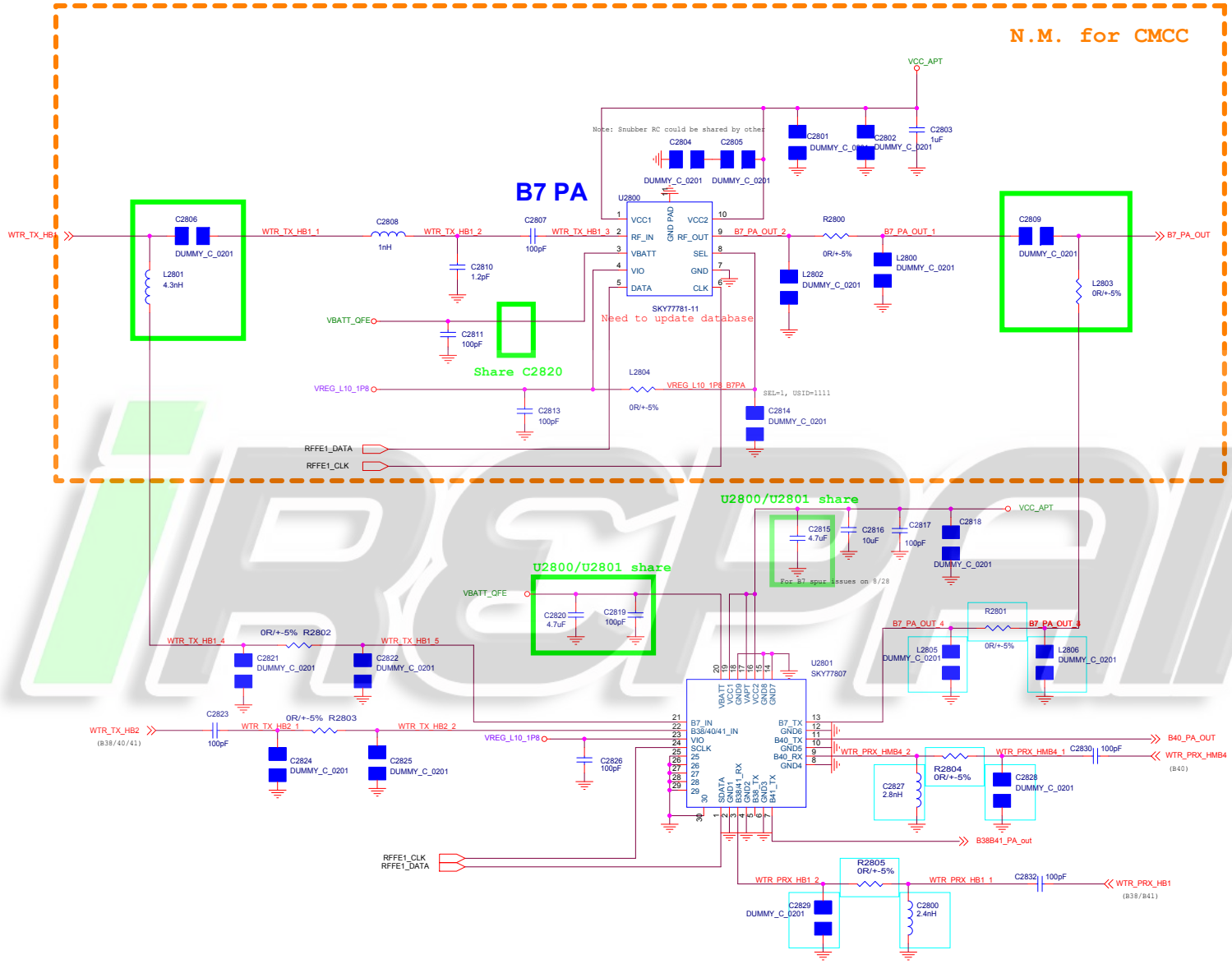

iRSPAIR

FIH Confidential and Proprietary

Title	HCPA B40/B38/B41/B7	
Size C	Document Number Titan LTE	Rev MP
Date: Thursday, November 13, 2014	Sheet 28 of 35	

DUX B40/B38/B41/B7

FDD B7 DUX

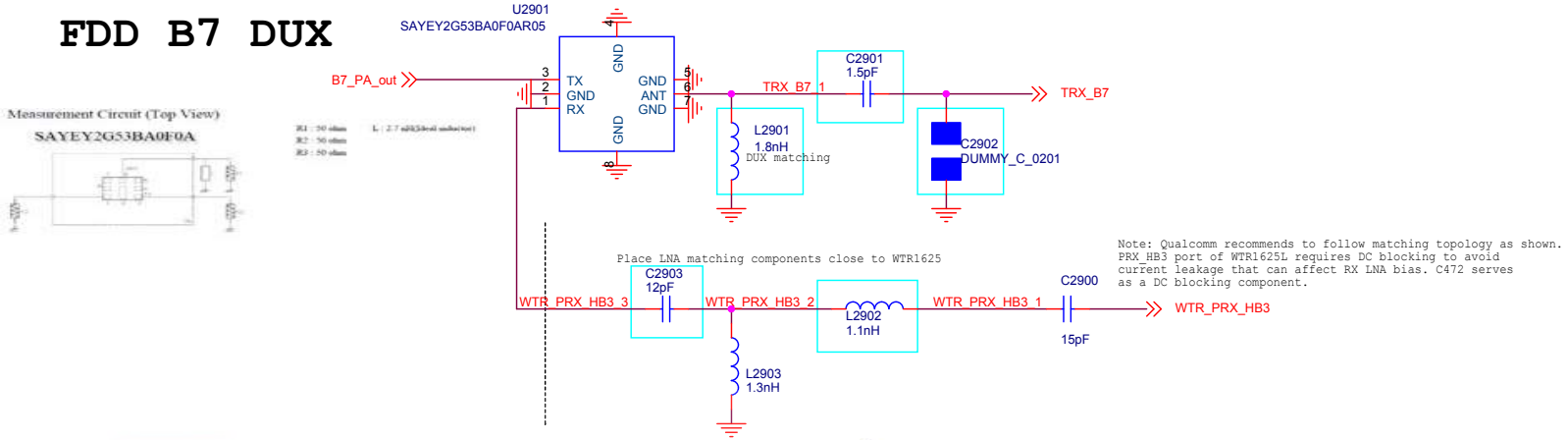

TDD B40

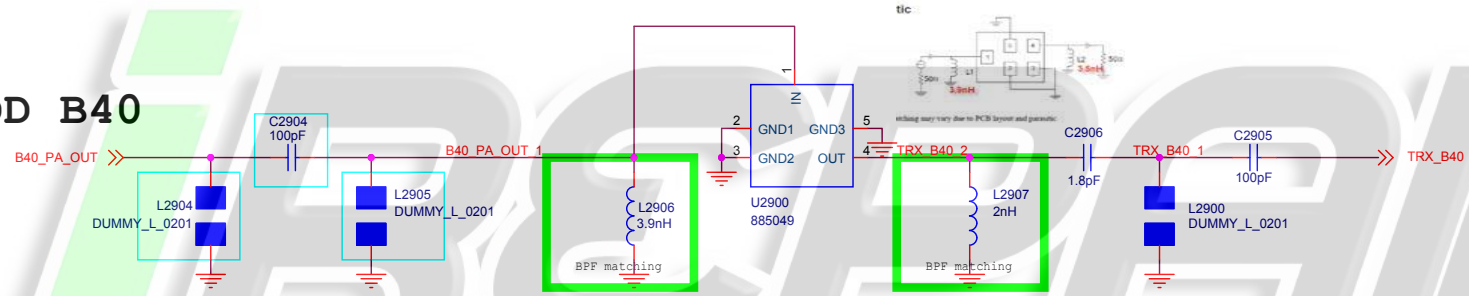

TDD B38/41

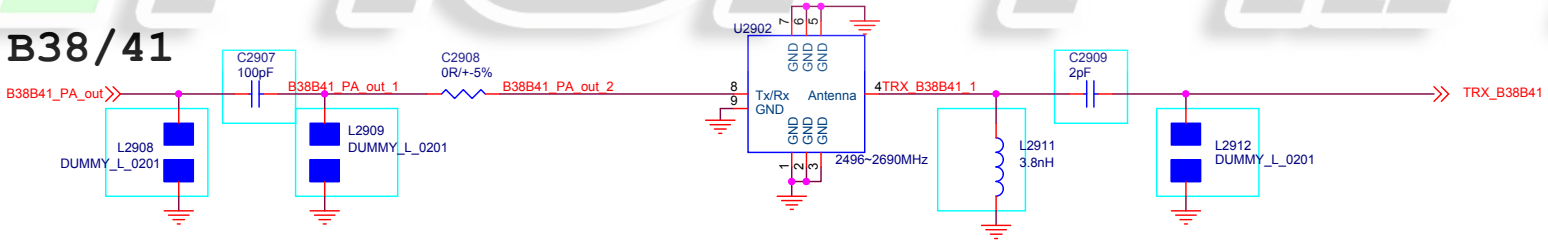

iREPAIR

FIH Confidential and Proprietary

Title	DUX B40/B38/B41/B7	
Size B	Document Number Titan LTE	Rev MP
Date: Thursday, November 13, 2014	Sheet 29 of 35	

FDD B28 (B20) PA&TRX

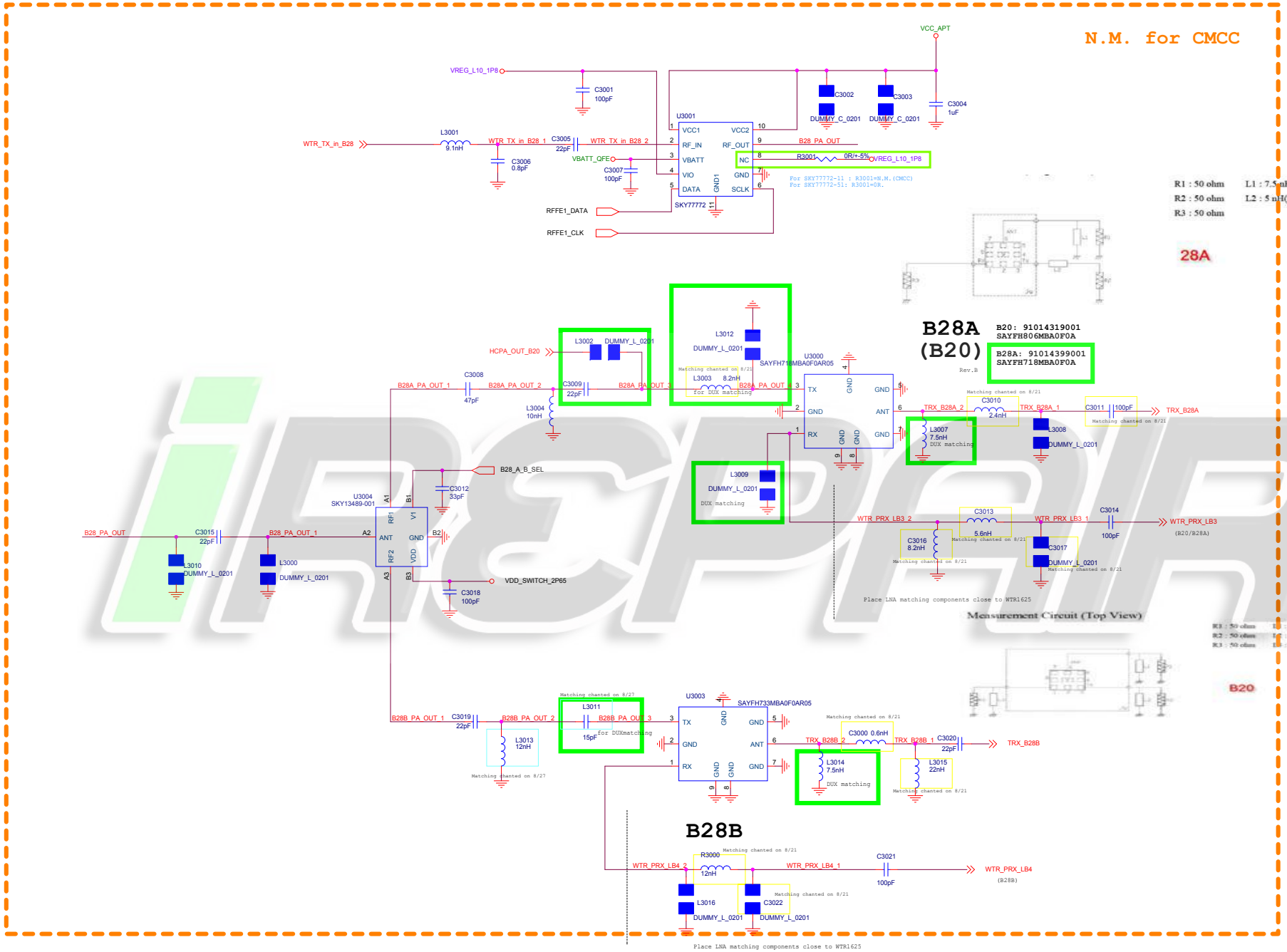

FIH Confidential and Proprietary

Title	B28(B20) PATRX	
Size C	Document Number Titan LTE	Rev MP
Date: Thursday, November 13, 2014	Sheet 30 of 35	

DUX B5/B8

R1 : 50 ohm
R2 : 50 ohm
R3 : 50 ohm
L1 : 7.2 nH(Ideal inductor)
L2 : 25 nH(Ideal inductor)

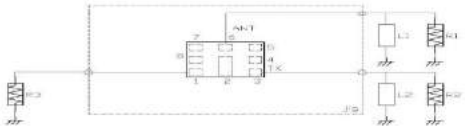

B5

FDD B5 TRX

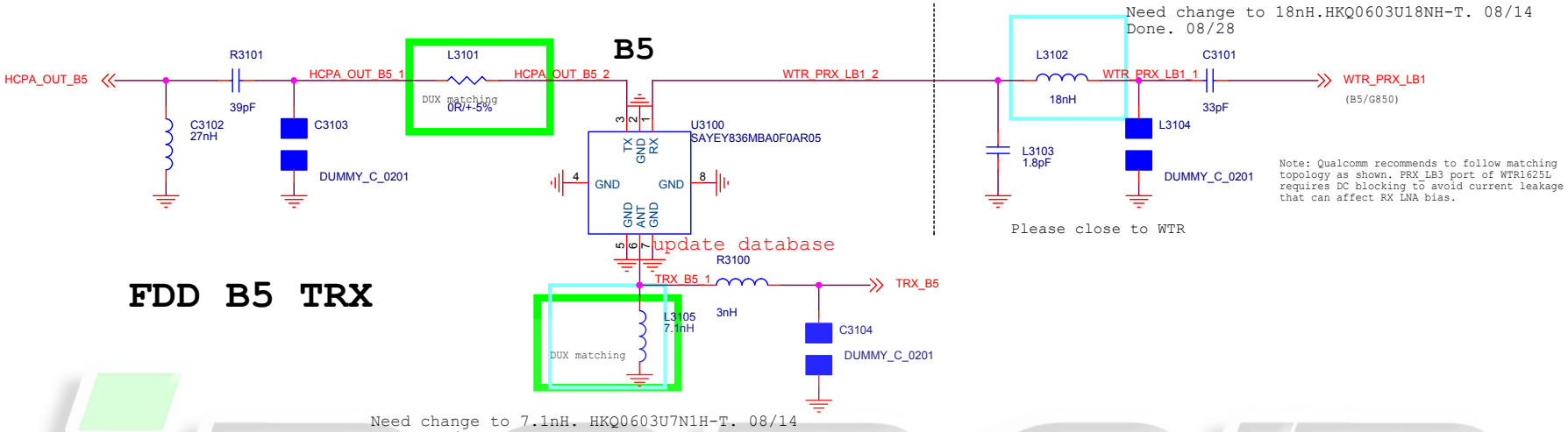

Need change to 7.1nH. HKQ0603U7N1H-T. 08/14
Done. 08/28

FDD B8 TRX

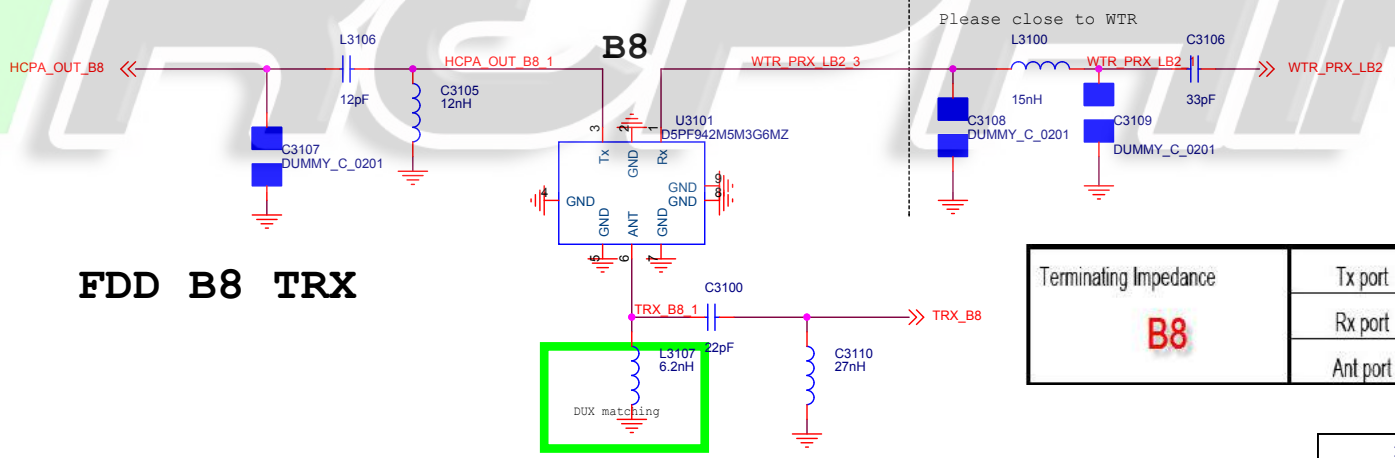

Terminating Impedance		
B8	Tx port	50
	Rx port	50
	Ant port	50 // 7.5nH (Q=∞)

iRSPAIR

DRX FEM

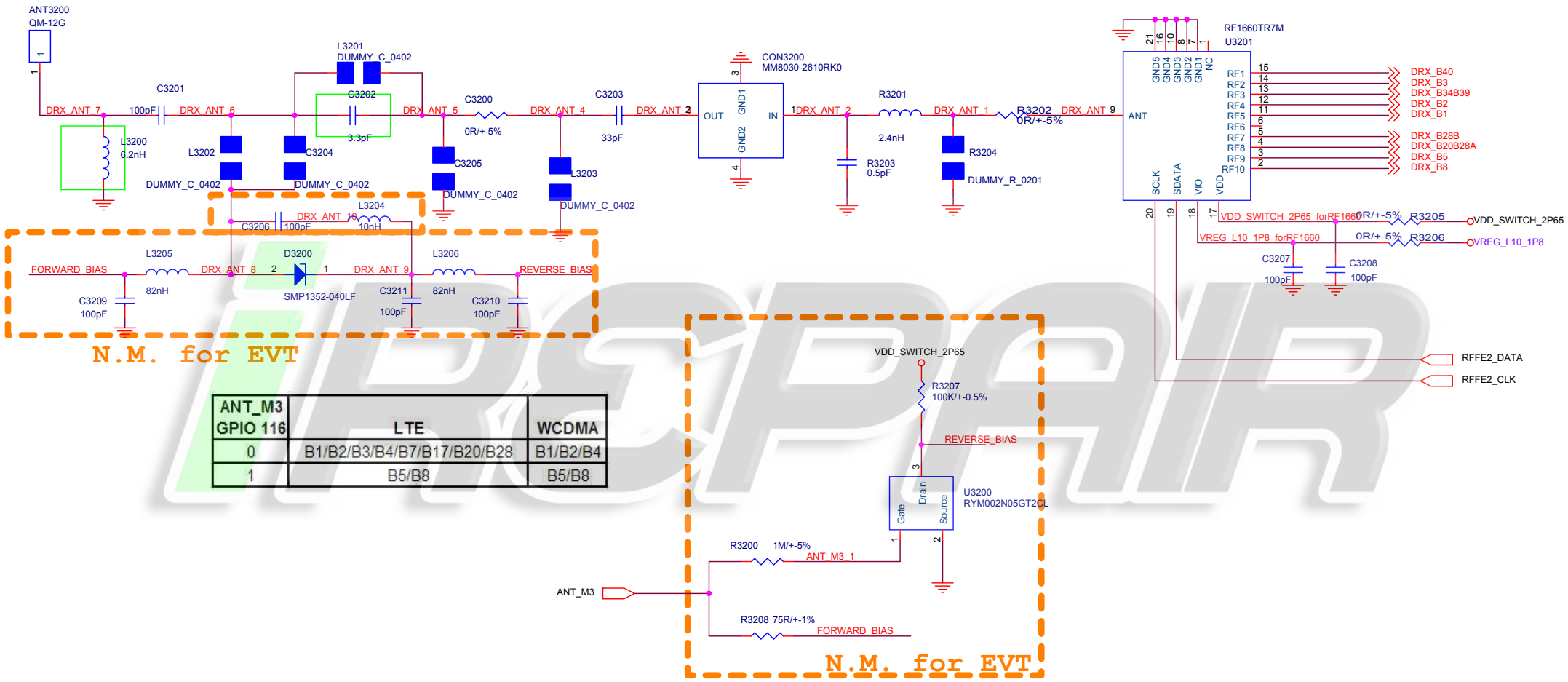

ANT_M3 GPIO 116	LTE	WCDMA
0	B1/B2/B3/B4/B7/B17/B20/B28	B1/B2/B4
1	B5/B8	B5/B8

FIH Confidential and Proprietary

Title	DRX FEM	
Size B	Document Number Titan LTE	Rev MP
Date: Thursday, November 13, 2014	Sheet 32 of 35	

DRX SAW

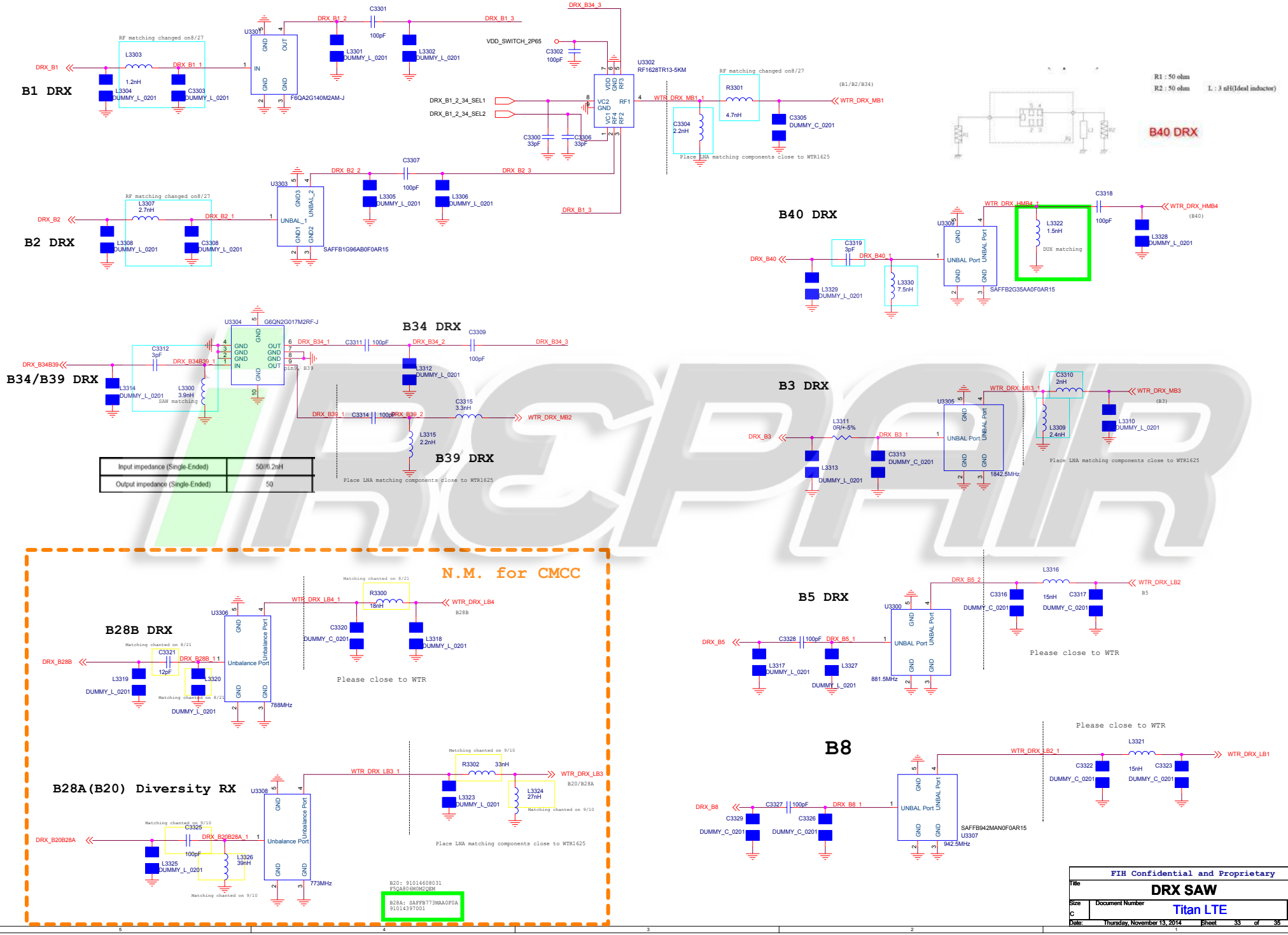
B1 DRX
B2 DRX
B34 DRX
B34/B39 DRX
B39 DRX
B40 DRX
B3 DRX
B5 DRX
B8
B28B DRX
B28A(B20) Diversity RX
N.M. for CMCC
Input impedance (Single-Ended) 50//6.2nH
Output impedance (Single-Ended) 50
Place LNA matching components close to WTR1625
Please close to WTR
R1 : 50 ohm
R2 : 50 ohm
L : 3 nH(Ideal inductor)
FIH Confidential and Proprietary
Title DRX SAW
Size C
Document Number Titan LTE
Rev MP
Date: Thursday, November 13, 2014
Sheet 33 of 35

GNSS FRONT END & DRX B7/B41

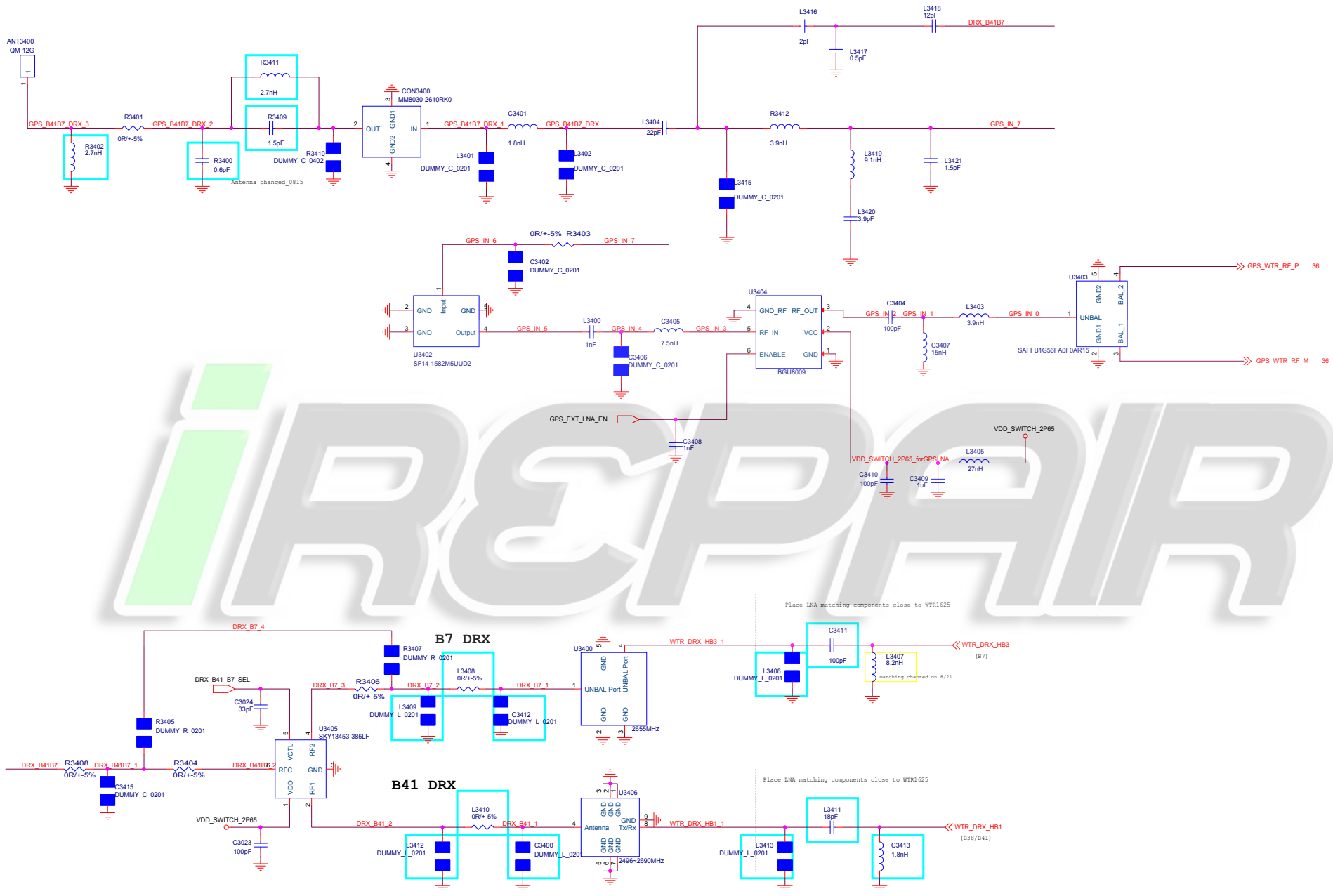

iREPAIR

FIH Confidential and Proprietary

Title	GNSS FEM/DRX_B7/B41	
Size C	Document Number Titan LTE	Rev MP
Date: Thursday, November 13, 2014	Sheet 34 of 35	

WCN3620

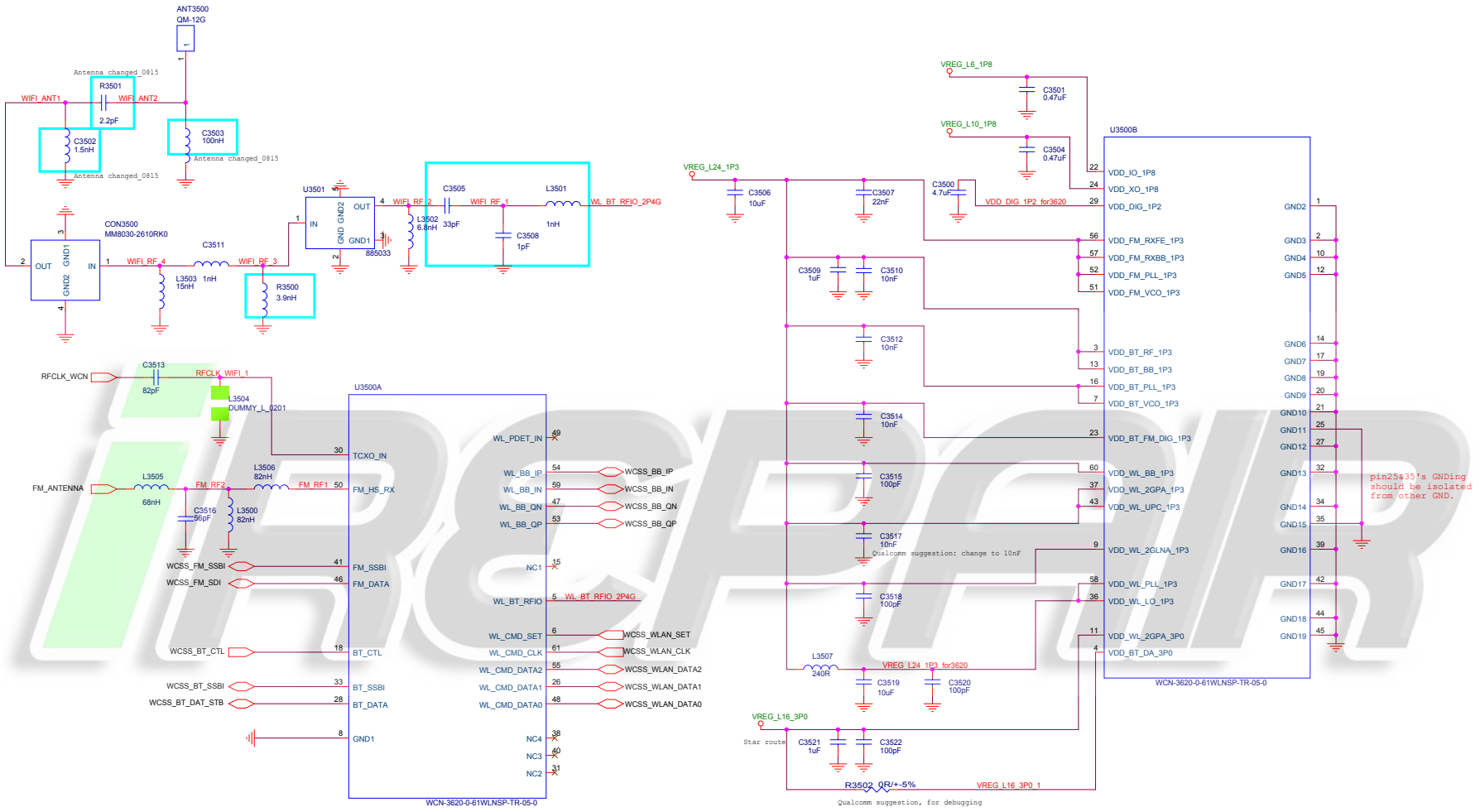

FIH Confidential and Proprietary

Title	WCN3620	
Size C	Document Number Titan LTE	Rev MP
Date: Thursday, November 13, 2014	Sheet 35 of 35	